# Test Report: MPM-45-15

45W AC-DC High Reliable PCB-Mount Green Medical Power Moudle

## ■ DESIGN VERIFY TEST

Output Function Test
Input Function Test
Protection Function Test
Component Stress Test

## ■ SAFETY & E.M.C. TEST

Safety Test
E.M.C. Test

## ■ RELIABILITY TEST

ENVIRONMENT TEST

# ■ DESIGN VERIFY TEST

## OUTPUT FUNCTION TEST

| NO | TEST ITEM | SPECIFICATION | TEST CONDITION | RESULT |
|---|---|---|---|---|
| 1 | OUTPUT VOLTAGE(Max)<br>TOLERANCE | V1: -2%~ +2 % | I/P: 80VAC /264VAC<br>O/P:FULL/ MIN. LOAD<br>Ta:25℃ | V1: -0.06%~0.07% |
| 2 | LINE REGULATION (Max) | V1: -0.5%~ +0.5 % | I/P: 80VAC~ 264VAC<br>O/P:FULL LOAD<br>Ta:25℃ | V1: -0.01%~0.07% |
| 3 | LOAD REGULATION(Max) | V1: -0.5%~ +0.5 % | I/P: 230VAC<br>O/P:FULL ~MIN LOAD<br>Ta:25℃ | V1: -0.06%~0.07% |
| 4 | OVER/UNDERSHOOT TEST | < ± 5% | I/P: 230VAC<br>O/P:FULL LOAD<br>Ta:25℃ | 2.0% |
| 5 | PEAK LOAD TEST | ≥ 10 Sec. | I/P: 230VAC<br>O/P:PEAK LOAD<br>Ta:25℃ | OK |
| 6 | RIPPLE & NOISE(Max ) | V1: 120mVp-p | I/P:230VAC<br>O/P:FULL LOAD<br>Ta:25℃ | V1: 37mVp-p |
| | high frequency： 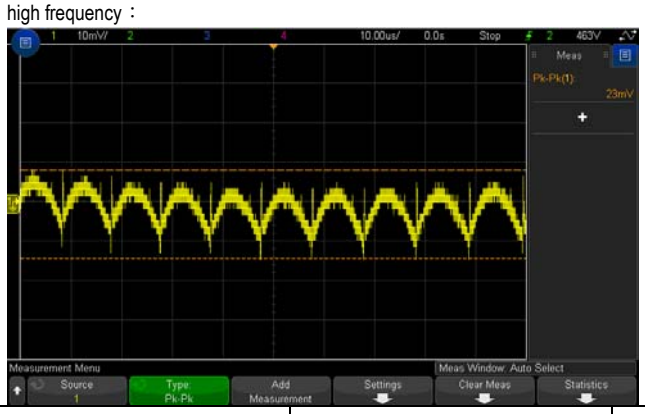 | | low frequency： 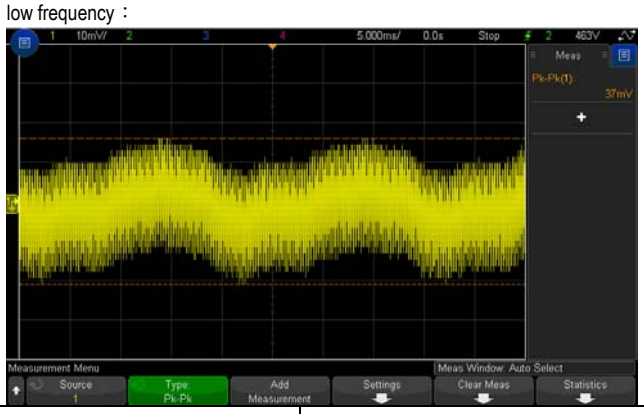 | |
| 7 | SET UP TIME(Max) | 230VAC/1000ms<br>115VAC/1000ms | I/P： 230 VAC<br>I/P： 115 VAC<br>O/P：FULL LOAD<br>Ta：25℃ | 230VAC/ 174ms<br>115VAC/ 215ms |
| | INPUT=230VAC/50HZ @ FULL LOAD<br>CH1 : Output Voltage CH2 : AC Input Voltage 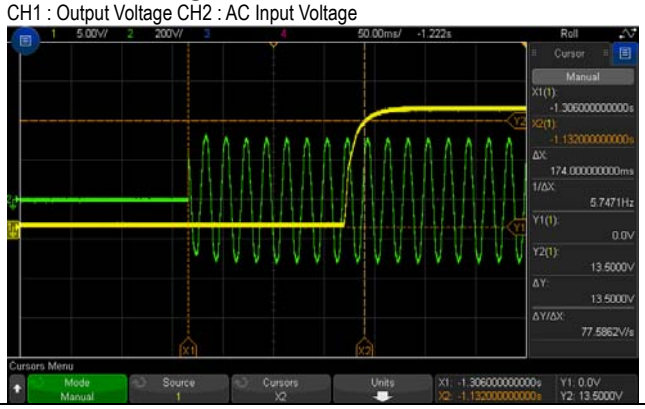 | | INPUT=115VAC/60HZ @ FULL LOAD<br>CH1 : Output Voltage CH2 : AC Input Voltage 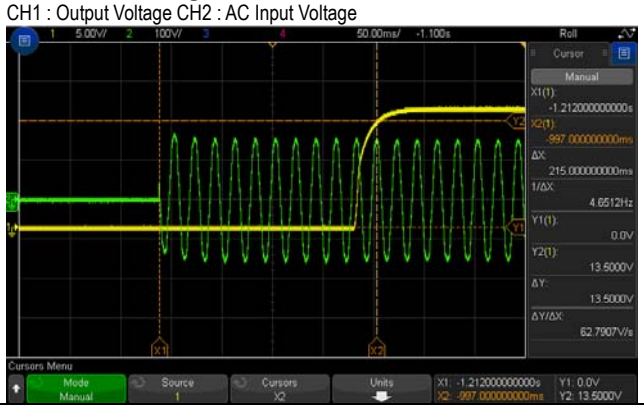 | |

| | | | | |
|---|---|---|---|---|
| 8 | RISE TIME (Max) | 230VAC/30ms<br>115VAC/30ms | I/P： 230 VAC<br>I/P： 115 VAC<br>O/P：FULL LOAD<br>Ta：25℃ | 230VAC/ 18.09ms<br>115VAC/ 19.09ms |

INPUT=230VAC/50HZ @ FULL LOAD

CH1 : Output Voltage

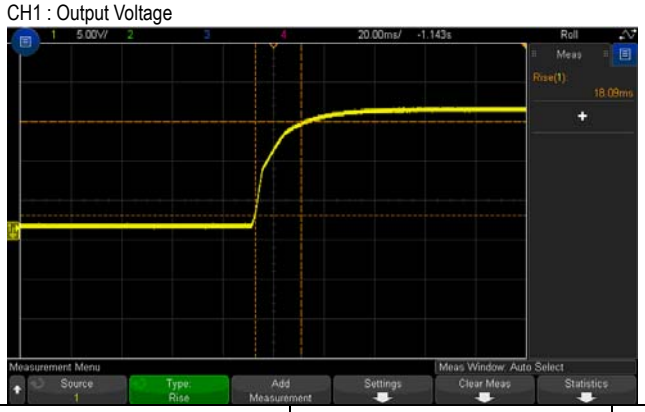


INPUT=115VAC/60HZ @ FULL LOAD

CH1 : Output Voltage

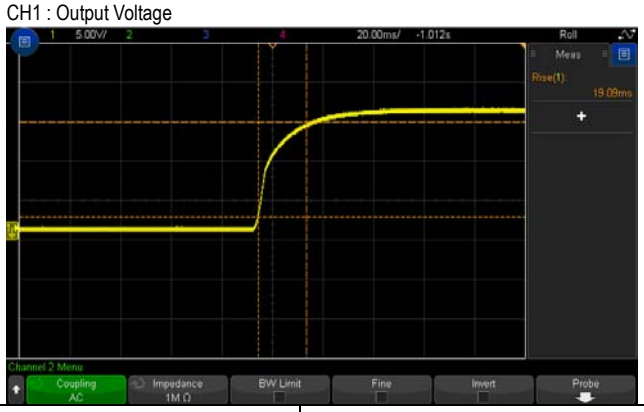


| | | | | |
|---|---|---|---|---|
| 9 | HOLD UP TIME (Typ.) | 230VAC/50ms<br>115VAC/12ms | I/P： 230 VAC<br>I/P： 115 VAC<br>O/P：FULL LOAD<br>Ta：25℃ | 230VAC/ 121ms<br>115VAC/ 25.8ms |

INPUT=230VAC/50HZ @ FULL LOAD

CH1 : Output Voltage CH2 : AC Input Voltage

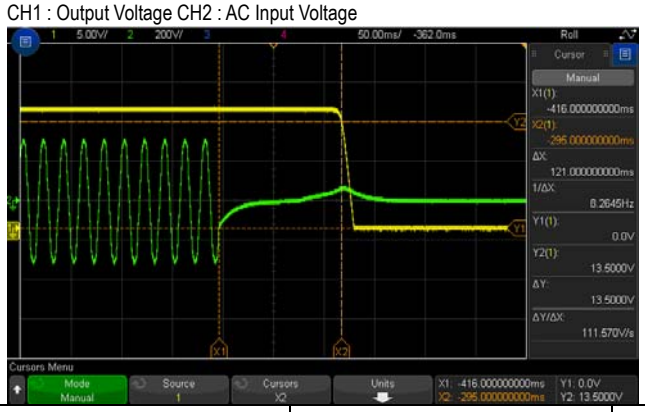


INPUT=115VAC/60HZ @ FULL LOAD

CH1 : Output Voltage CH2 : AC Input Voltage

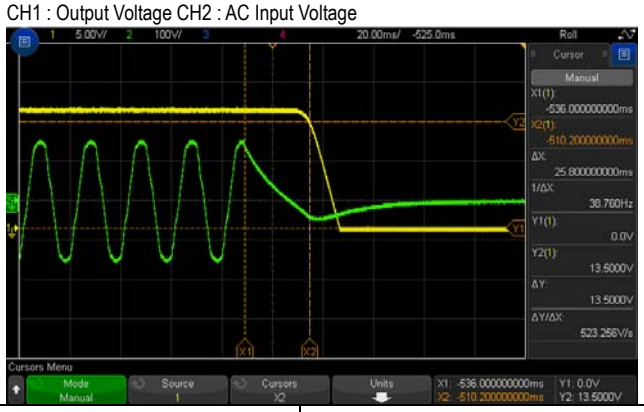


| | | | | |
|---|---|---|---|---|
| 10 | DYNAMIC LOAD | V1: 1500 mVp-p | I/P: 230VAC<br>O/P:<br>(1)FULL /MIN LOAD 50%DUTY / 120HZ<br>(2)FULL /MIN LOAD 50%DUTY / 1KHZ<br>Ta:25℃ | <br><br>165mVp-p<br>171mVp-p |

FULL /50% LOAD 50%DUTY / 120HZ

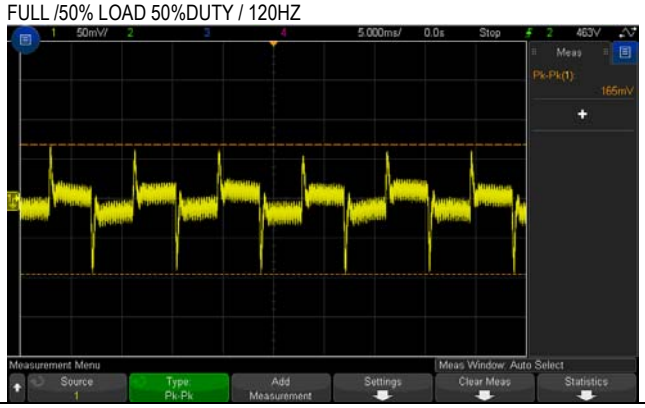


FULL /50% LOAD 50%DUTY / 1KHZ

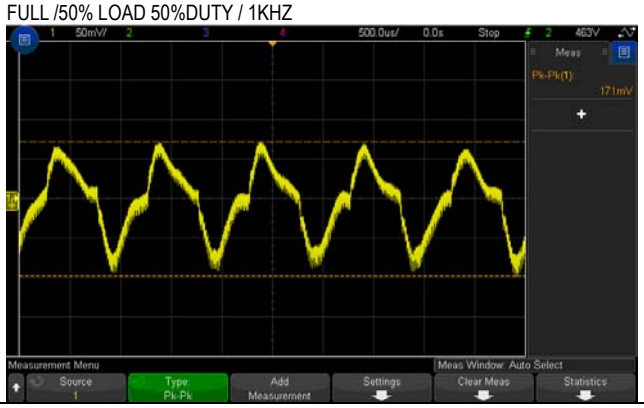

# INPUT FUNCTION TEST

| NO | TEST ITEM | SPECIFICATION | TEST CONDITION | RESULT |
|---|---|---|---|---|
| 1 | INPUT VOLTAGE RANGE | 80VAC~264VAC<br>113VDC~370VDC | I/P:TESTING<br>O/P:FULL LOAD<br>Ta:25℃ | 69VAC~264VAC<br>98VDC~370VDC |
| | | | I/P:<br>LOW-LINE-3V=77 V<br>HIGH-LINE+10V=300 V<br>O/P:FULL/MIN LOAD<br>(PLEASE CHECK DERATING CURVE)<br>ON: 30 Sec OFF: 30 Sec 10MIN<br>( POWER ON/OFF NO DAMAGE ) | TEST: OK |
| 2 | INPUT FREQUENCY RANGE | 47HZ ~63 HZ<br>NO DAMAGE | I/P:80 VAC ~264 VAC<br>O/P:FULL~MIN LOAD<br>Ta:25℃ | TEST: OK |
| 3 | INPUT CURRENT (Typ.) | 230V/ 0.6 A<br>115V/ 1.2 A | I/P： 230 VAC<br>I/P： 115 VAC<br>O/P：FULL LOAD<br>Ta：25℃ | I =0.39A/ 230VAC<br>I =0.64A/ 115VAC |
| 4 | LEAKAGE CURRENT | < 100uA / 264VAC | I/P： 264VAC<br>O/P：Min LOAD<br>Ta：25℃ | Touch current：82.4 uA |
| 5 | NO LOAD CONSUMPTION | <0.1 W | I/P：115VAC/230VAC<br>O/P：NO LOAD<br>Ta：25℃ | 0.037W/115VAC<br>0.075W/230VAC |
| 7 | EFFICIENCY(Typ.) | 92.5% | I/P:230 VAC<br>O/P:FULL LOAD<br>Ta:25℃ | 93.2% |

EFFICIENCY vs LOAD

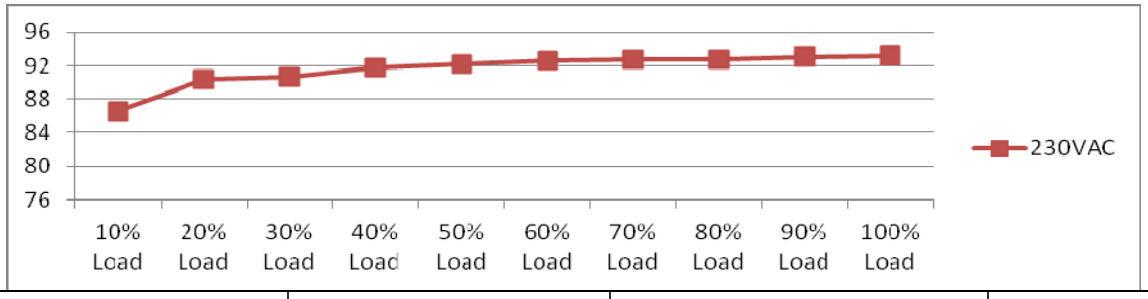


| | | | | |
|---|---|---|---|---|
| 8 | INRUSH CURRENT(Typ.) | 230V/60A<br>115V/30A<br>COLD START | I/P： 230 VAC<br>I/P： 115 VAC<br>O/P：FULL LOAD<br>Ta：25℃ | I =50A/ 230VAC<br>I =25.7A/ 115VAC |

INPUT=230VAC/50HZ @ FULL LOAD

CH2 : AC Input Voltage CH4 : Input current

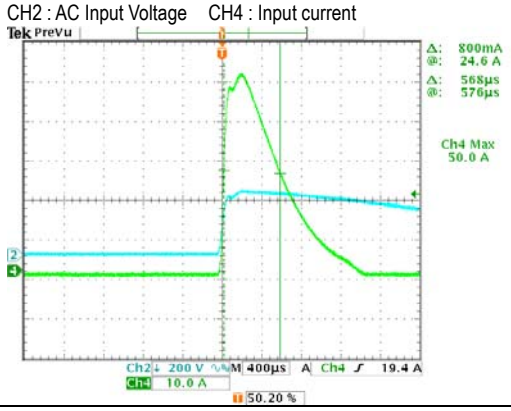


INPUT=115VAC/ 60HZ @ FULL LOAD

CH2 : AC Input Voltage CH4 : Input current

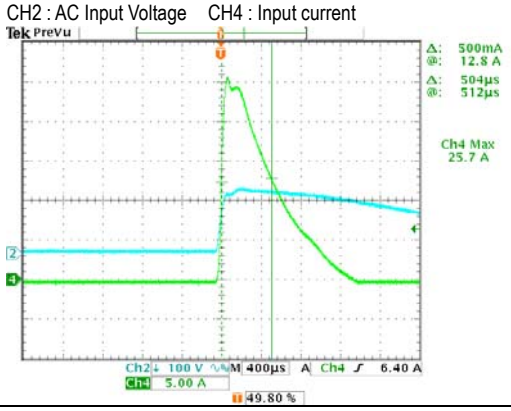

## PROTECTION FUNCTION TEST

| NO | TEST ITEM | SPECIFICATION | TEST CONDITION | RESULT |
|---|---|---|---|---|
| 1 | OVER LOAD PROTECTION | 115%~ 135 % | I/P: 264VAC<br>I/P: 230VAC<br>I/P: 100VAC<br>O/P:TESTING<br>Ta:25℃ | 121.0% 264VAC<br>127.0%/ 230VAC<br>122.0%100VAC<br>PROTECTION TYPE：<br>Hiccup mode ,recovers automatically after fault condition is removerd。 |
| 2 | OVER VOLTAGE PROTECTION | 15.8V~20.3V | I/P: 264VAC<br>I/P: 230VAC<br>I/P: 80VAC<br>O/P:MIN LOAD<br>Ta:25℃ | 18.5VAC<br>18.5VAC<br>18.5VAC<br>PROTECTION TYPE：<br>Shut down O/P voltage ,re-power on to recover. |
| 3 | OVER TEMPERATURE PROTECTION | Protection type :<br>Shut down O/P voltage,re-power on to recover. | I/P:264VAC<br>I/P: 80VAC<br>O/P:FULL LOAD | O.T.P. Active<br>Protection type :<br>Shut down O/P voltage ,re-power on to recover. |
| 4 | SHORT PROTECTION | SHORT EVERY OUTPUT<br>1 HOUR NO DAMAGE | I/P: 264VAC<br>I/P: 80VAC<br>O/P: FULL LOAD<br>Ta:25℃ | NO DAMAGE<br>PROTECTION TYPE：<br>Hiccup mode ,recovers automatically after fault condition is removerd。 |

## COMPONENT STRESS TEST

| NO | TEST ITEM | SPECIFICATION | TEST CONDITION | RESULT |
|---|---|---|---|---|
| 1 | PWM Transistor<br>( D to S) or (C to E) Peak Voltage | Q1 Rated:<br>7A/600V | AC ON/OFF<br>I/P:High-Line +3V =267V<br>VDS:<br>O/P: (1)Full Load<br>(2)Output Short<br>(3)Dynamic Load Full Load/ Min. Load 90%Duty/1KHz<br>(4)Dynamic Load Full Load/ Min. Load 90%Duty/3KHz<br>(5)Dynamic Load Full Load/ Min. Load 90%Duty/5KHz<br>(6)Dynamic Load 100% Load/ Min. Load 50%Duty/120Hz<br>(7)0%→400% Load.<br>Ta:25℃ | VDS:<br>(1) 513V<br>(2) 429V<br>(3) 517V<br>(4) 513V<br>(5) 509V<br>(6) 513V<br>(7) 513V |
| 4 | Diode Peak Voltage | Q100 Rated:<br>85A/100V | AC ON/OFF<br>I/P:High-Line +3V =267 V<br>O/P: (1)Full Load<br>(2)Output Short<br>(3)Dynamic Load Full Load/ Min. Load 90%Duty/1KHz<br>(4)Dynamic Load Full Load/ Min. Load 90%Duty/3KHz<br>(5)Dynamic Load Full Load/ Min. Load 90%Duty/5KHz<br>(6)Dynamic Load 100% Load/ Min. Load 50%Duty/120Hz<br>(7)0%→400% Load.<br>(8).NO LOAD<br>Ta:25℃ | Q100:<br>VDS:<br>(1) 83.3V<br>(2) 68.1V<br>(3) 83.3V<br>(4) 83.3V<br>(5) 83.3V<br>(6) 84.1V<br>(7) 84.1V<br>(8) 84.1V |

| | | | | |
|---|---|---|---|---|
| 5 | Input Capacitor Voltage | C5 Rated:<br>120μ/ 400 V | I/P:High-Line +3V =267V<br>O/P: (1)Full Load input on/off<br>(2) Min load input on /Off<br>(3)Full Load /Min load Change<br>(4)Full load continue<br>Ta:25℃ | (1) 376V<br>(2) 372V<br>(3) 372V<br>(4) 368V |
| 6 | Control IC Voltage Test | PWM IC U2 Rated:<br>-0.3 V~ 30 V<br><br>O/P IC U100 Rated:<br>-0.3V~ 38 V | AC ON/OFF<br>I/P:High-Line +3V =267 V<br>O/P(1)FULL LOAD<br>(2) Output Short<br>(3)O.L.P<br>(4)O.V.P.<br>(5)NO LOAD (LOW LINE)<br>Ta:25℃ | U2 U100<br>(1)17.2V (1)15.3V<br>(2)17.2V (2)15.3V<br>(3)17.2V (3)10.5V<br>(4)14.9V (4)18.6V<br>(5)17.2V (5)15.3V |
| 9 | Clamp Diode Peak Voltage | D1 Rated：<br>650 V/ 1 A | AC ON/OFF<br>I/P：High-Line +3V = 267V<br>O/P： (1) Dynamic Load<br>90%Duty/1KHz<br>(2)Full load continue<br>Ta：25℃ | (1) 465V<br>(2) 465V |

## SAFETY TEST

| NO | TEST ITEM | SPECIFICATION | TEST CONDITION | RESULT |
|---|---|---|---|---|
| 1 | WITHSTAND VOLTAGE | I/P-O/P: 4KVAC/min | I/P-O/P:4.4 KVAC/min<br>Ta:25℃ | I/P-O/P: 2.086mA<br>NO DAMAGE |
| 2 | ISOLATION RESISTANCE | I/P-O/P:500VDC>100MΩ | I/P-O/P: 600 VDC<br>Ta:25℃ | I/P-O/P: 9999MΩ<br>NO DAMAGE |

## E.M.C TEST

| NO | TEST ITEM | SPECIFICATION | TEST CONDITION | RESULT |
|---|---|---|---|---|
| 1 | HARMONIC | EN61000-3-2<br>CLASS A | I/P:230VAC/50HZ<br>O/P:FULL LOAD<br>Ta:25℃ | PASS |
| 2 | CONDUCTION | EN55011<br>CLASS B | I/P： 230 VAC (50HZ)<br>O/P：FULL/50% LOAD<br>Ta：25℃ | PASS<br>Test by certified Lab |
| 3 | RADIATION | EN55011<br>CLASS B | I/P： 230 VAC (50HZ)<br>O/P：FULL LOAD<br>Ta：25℃ | PASS<br>Test by certified Lab |
| 4 | E.S.D | EN61000-4-2<br>MEDICAL<br>AIR：15KV / Contact：8KV | I/P： 230 VAC/50HZ<br>O/P：FULL LOAD<br>Ta：25℃ | ☑CRITERIA A<br>□CRITERIA B |
| 5 | E.F.T | EN61000-4-4<br>MEDICAL<br>INPUT： 2KV | I/P： 230 VAC/50HZ<br>O/P：FULL LOAD<br>Ta：25℃ | ☑CRITERIA A<br>□CRITERIA B |
| 6 | SURGE | IEC61000-4-5<br>MEDICAL<br>L-N ：1KV | I/P： 230 VAC/50HZ<br>O/P：FULL LOAD<br>Ta：25℃ | ☑CRITERIA A<br>□CRITERIA B |
| 7 | Test by certified Lab & Test Report Prepare<br>Any contradictions of the test results, please refer to the latest EMC test report | | | |

# ■ RELIABILITY TEST

## ENVIRONMENT TEST

| NO | TEST ITEM | SPECIFICATION | TEST CONDITION | RESULT |
|---|---|---|---|---|
| 1 | TEMPERATURE RISE TEST | MODEL：MPM-45-48<br>1. ROOM AMBIENT BURN-IN：2 HRS<br>I/P： 230VAC O/P： FULL LOAD Ta= 28 ℃<br>2. HIGH AMBIENT BURN-IN： 2 HRS<br>I/P： 230VAC O/P： FULL LOAD Ta= 60.6℃ | | |
| 2 | OVER LOAD BURN-IN TEST | NO DAMAGE<br>1 HOUR ( MIN ) | I/P： 230 VAC<br>O/P： 134 % LOAD<br>Ta：25℃ | TEST：OK |
| 3 | LOW TEMPERATURE<br>TURN ON TEST | TURN ON AFTER 2 HOUR | I/P： 264VAC/100VAC<br>O/P： 100 % LOAD<br>Ta= -35 ℃ | TEST：OK |
| 4 | HIGH HUMIDITY<br>HIGH TEMPERATURE<br>HIGH VOLTAGE<br>TURN ON TEST | AFTER 12 HOURS<br>IN CHAMBER ON<br>CONTROL 60 ℃ / 95 %R.H<br>NO DAMAGE | I/P： 272 VAC<br>O/P：FULL LOAD<br>Ta= 60 ℃<br>HUMIDITY= 95 %R.H | TEST：OK |
| 5 | TEMPERATURE<br>COEFFICIENT | ± 0.03 %/℃(0~50℃) | I/P： 230 VAC<br>O/P：FULL LOAD | ± 0.0116 %/℃(0~50℃) |

| NO | Position | ROOM AMBIENT Ta= 28 ℃ | HIGH AMBIENT Ta=60.6 ℃ |
|---|---|---|---|
| 1 | RTH1 | 51.2℃ | 76.8℃ |
| 2 | LF1 | 50℃ | 77.8℃ |
| 3 | LF2 | 51.4℃ | 79.8℃ |
| 4 | C1 | 49.9℃ | 78℃ |
| 5 | BD1 | 53℃ | 81.5℃ |
| 6 | C5 | 51.9℃ | 80.7℃ |
| 7 | Q1 | 55.8℃ | 84.8℃ |
| 8 | C11 | 55.1℃ | 80.4℃ |
| 9 | RTH2 | 52.4℃ | 81.6℃ |
| 10 | T1 coil | 54.9℃ | 83.9℃ |
| 11 | T1 core | 54.1℃ | 83.1℃ |
| 12 | Q100 | 55.6℃ | 84.7℃ |
| 13 | C105 | 52.7℃ | 82℃ |
| 14 | C106 | 47.8℃ | 77.3℃ |
| 15 | C107 | 47.6℃ | 73.8℃ |
| 16 | L100 | 46℃ | 75.8℃ |
| 17 | R22 | 54℃ | 82.6℃ |
| 18 | D1 | 52.8℃ | 82.8℃ |
| 19 | U2 | 53.8℃ | 83℃ |
| 20 | U3 | 49.5℃ | 79.8℃ |
| 21 | R5 | 56.2℃ | 85.6℃ |
| 22 | C8 | 54.5℃ | 83.9℃ |
| 23 | R21 | 53.6℃ | 82.8℃ |
| 24 | D2 | 54.4℃ | 84.5℃ |
| 25 | R11 | 53.2℃ | 82.7℃ |
| 26 | Q2 | 51.3℃ | 81℃ |
| 27 | PCB | 51.1℃ | 80.7℃ |

| | | | |
|---|---|---|---|
| 6 | STORAGE TEMPERATURE TEST | -40~85℃ | 1. Thermal shock Temperature： -45℃~ +90℃<br>2. Temperature change rate ：25℃ / MIN<br>3. Dwell time low and high temperature ： 30 MIN/EACH<br>4. Total test cycle：10 CYCLE<br>5. Input/Output condition： STATIC |
| 7 | THERMAL SHOCK TEST | -30~60℃ | 1. Thermal shock Temperature： -35℃~ +65℃<br>2. Temperature change rate ：25℃ / MIN<br>3. Dwell time low and high temperature ： 30 MIN/EACH<br>4. Total test cycle：16 CYCLE<br>5. Input/Output condition：<br>15cycle:230V/ FULL LOAD AC ON 3sec/AC OFF 1sec TEST<br>1cycle:230V/ FULL LOAD Burn In Test |
| 8 | VIBRATION TEST | 10 ~ 500Hz, 2G 10min./1cycle, 60min. each along X, Y, Z axes | 1 Carton & 1 Set<br>(1) Waveform： Sine Wave<br>(2) Frequency：10~500Hz<br>(3) Sweep Time：10min/sweep cycle<br>(4) Acceleration：3G<br>(5) Test Time：180min in each axis (X.Y.Z)<br>(6) Ta：25℃ |
| 9 | CAPACITOR<br>LIFE CYCLE | SUPPOSE C105 IS THE MOST CRITICAL COMPONENT<br>(1) I/P： 230VAC O/P：FULL LOAD Ta= 25 ℃ LIFE TIME<br>(2) I/P： 230VAC O/P：FULL LOAD Ta= 60 ℃ LIFE TIME<br>(3) I/P： 230VAC O/P：75% LOAD Ta= 60 ℃ LIFE TIME<br>(4) I/P： 230VAC O/P：50% LOAD Ta= 60 ℃ LIFE TIME | (1) 463228 HRS<br>(2) 51508 HRS<br>(3) 68503 HRS<br>(4) 94082 HRS |
| 10 | MTBF | Conducted by Parts Stress Analysis Prediction<br>563.44K hrs min. MIL-HDBK-217F (25℃); 1530.14 K hrs min.Telcordia TR/SR-332（Bellcore）(25℃) | |
| 11 | Ongoing Reliability Test | I/P：230VAC O/P：FULL LOAD TA=50℃<br>Demonstration Mean Time Between Failure : 30,000 hours | |

| TEST RESULT | TESTER | REVIEW | APPROVAL |
|---|---|---|---|
| PASS | LIUTT | | WANGDZ |

2018.4.30 GP-A50-F010