DALI to Relay Module

Model: KDS-C

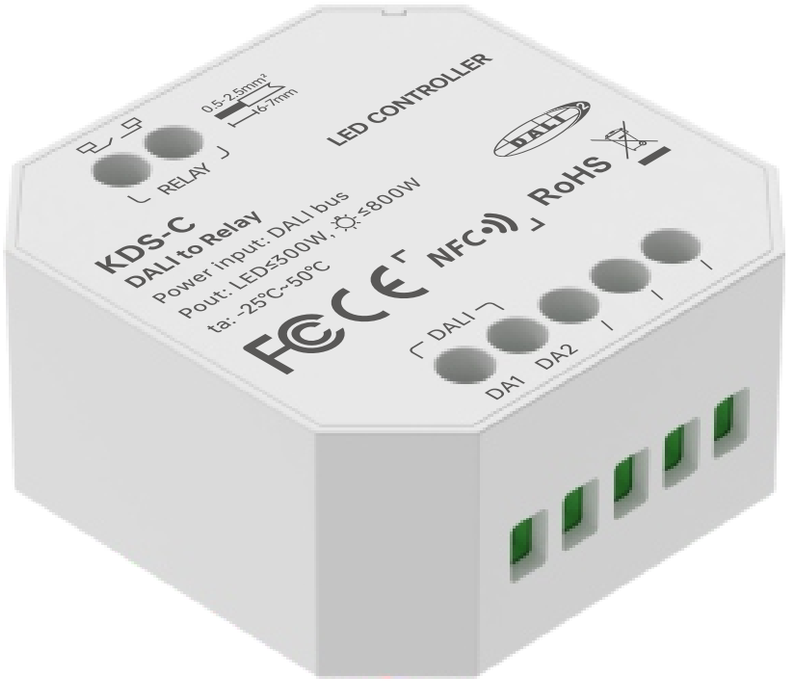

Manual

Product Introduction

- Built-in relay, stable and reliable, can be used as a switch to control lighting equipment.
- Integrated design combines power supply and communication, making installation more convenient.
- Compact size compatible with European, American, and Chinese standard junction boxes, offering flexible installation options for various scenarios.
- NFC programming allows for easy setup of DALI addresses, power status, and advanced DALI template settings, with simple operation.
- Can be quickly assigned an address via a DALI master controller.

Technical Specs

Model	KDS-C
Peak current	30mA@16V
Static current	2.5mA@16V
Power supply mode	DALI Bus power supply
Input signal	DALI-2
Output signal	Relay
Max. load current of the relay	5A
Max. load parameters of the relay	Resistive load: 800W@230Vac，400W@110Vac，200W@48Vdc Capacitive load: 300W@230Vac，150W@110Vac，100W@48Vdc
Switch maximum voltage	Max.250Vac，Max.48Vdc
Relay surge current	70A@10ms
Working temperature	-25°C~50°C
Product size	L45×W45.5×H20.5(mm)
Product weight	30g
Standards	EN 61347-2-13:2014+A1:2017、EN 61347-1:2015+A1:2021、 EN 62493:2015/A1:2022、IEC62386-101、IEC62386-102、IEC62386-208

CE RoHS FC DALI 2

Product Images

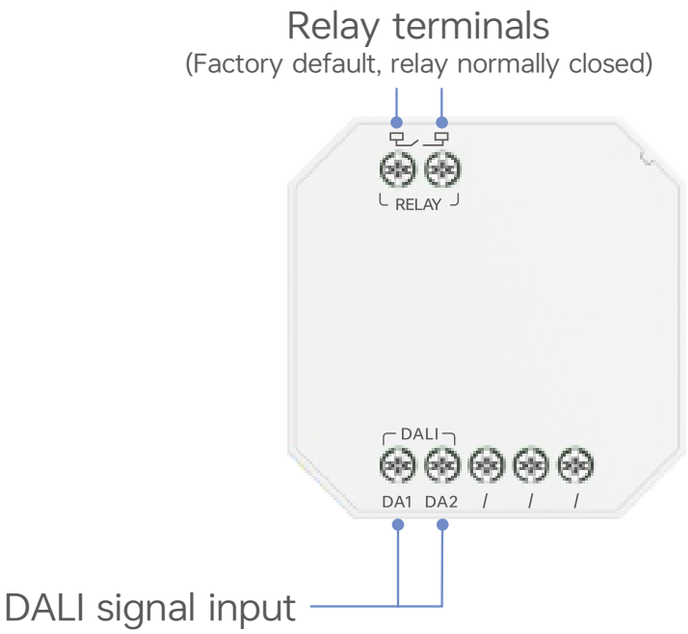

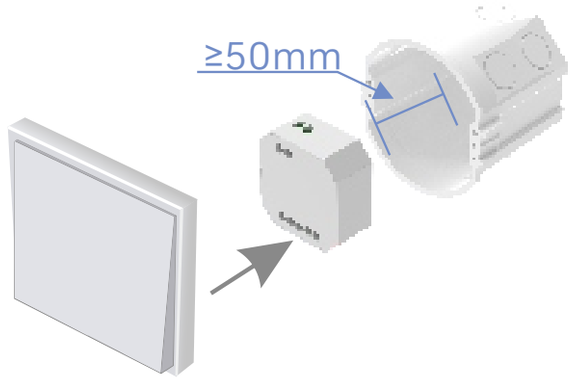

Hide this product inside a switch box.
*Requires installation in a box with
a depth of ≥50mm

Product Size

Unit: mm

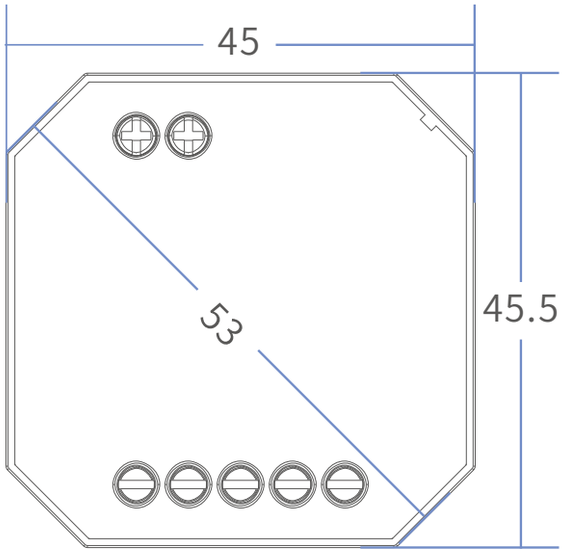

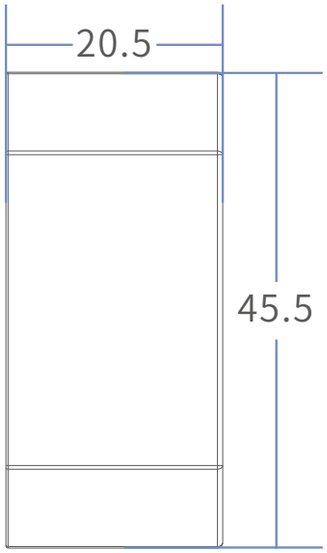

Wiring Application

1.Control 100-240Vac load wiring method.

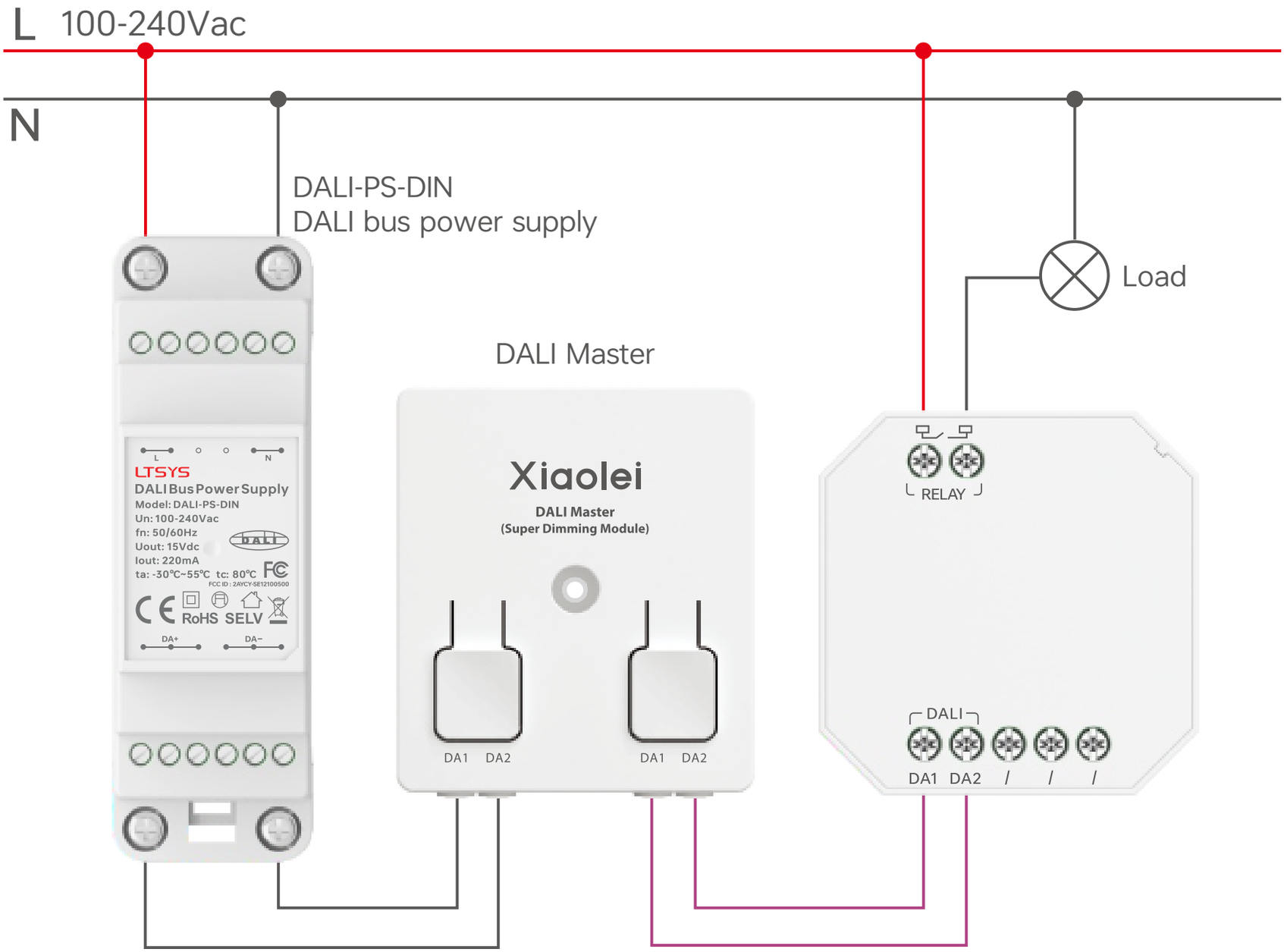

2.Control 12-24Vdc load wiring method.

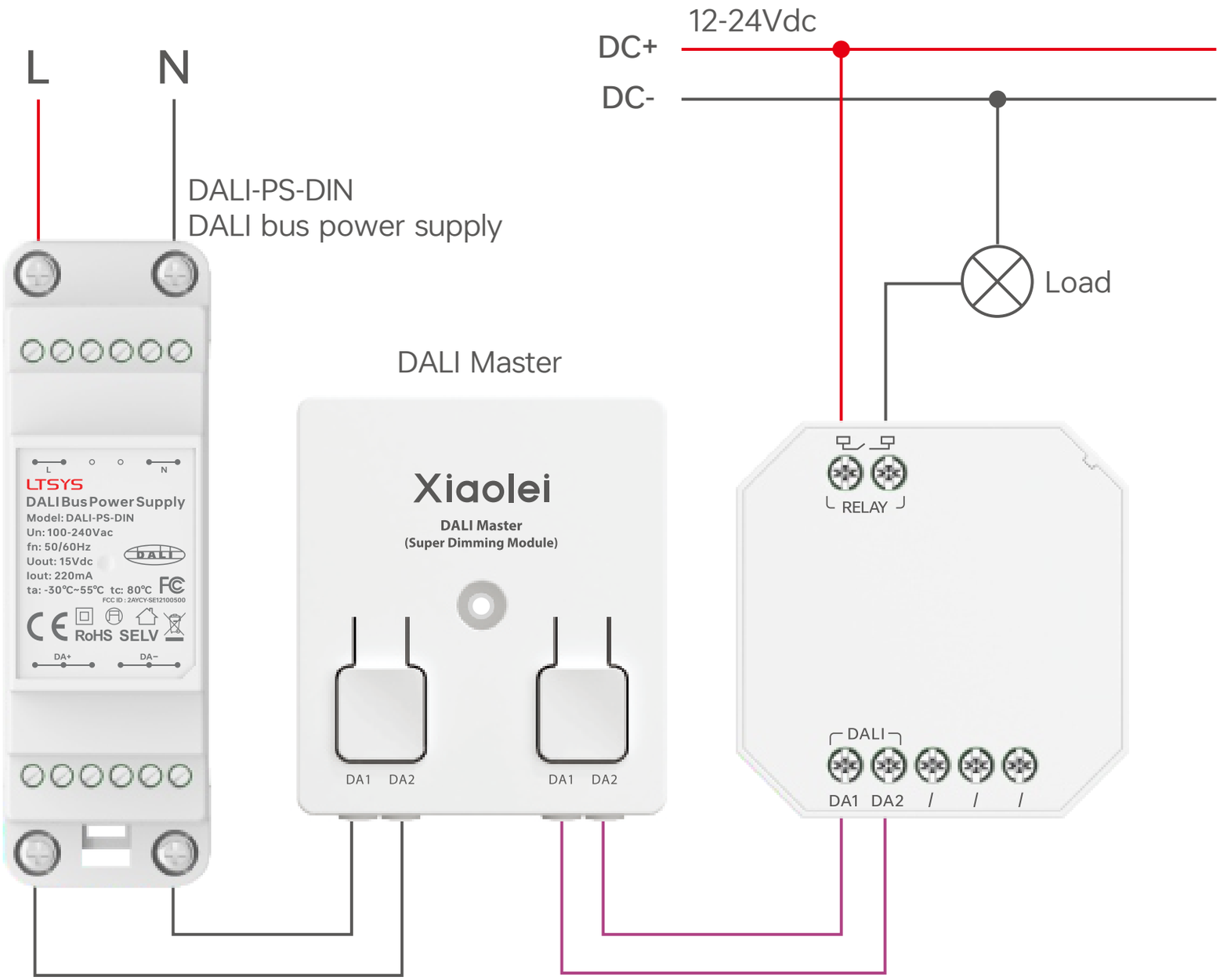

Use the NFC Setup APP

Scan the QR code below with your mobile phone and install the APP as prompted.
(Due to performance requirements, the required phone model is Apple: iPhone8 or above, and the operating system iOS13 or above; Android: NFC enabled models).

Scan code download APP
IOS/Android

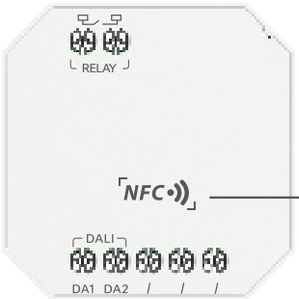

NFC identifier of the device

*When setting device parameters, Perform this operation only when the device is powered off.

1. Read the device

Click "Start Scan" in the APP [home page], place the sensing area of the phone near the NFC identification point of the driver, and read the device parameters.

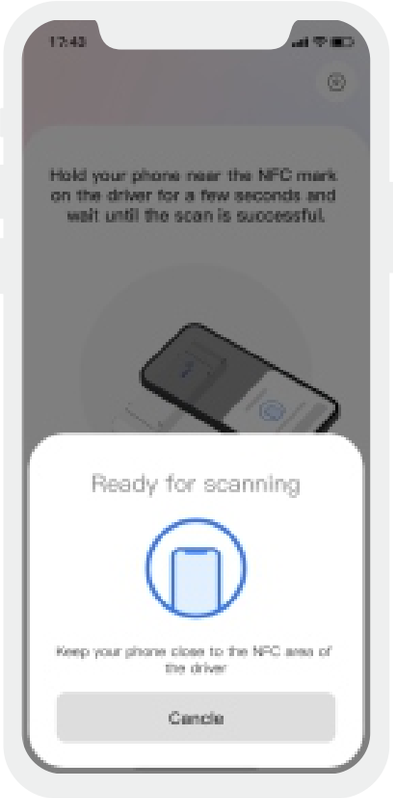

2. Edit parameters

Click “Parameters” to select and edit parameters such as DALI Address, Power-on Status, and Advanced DALI Template settings.

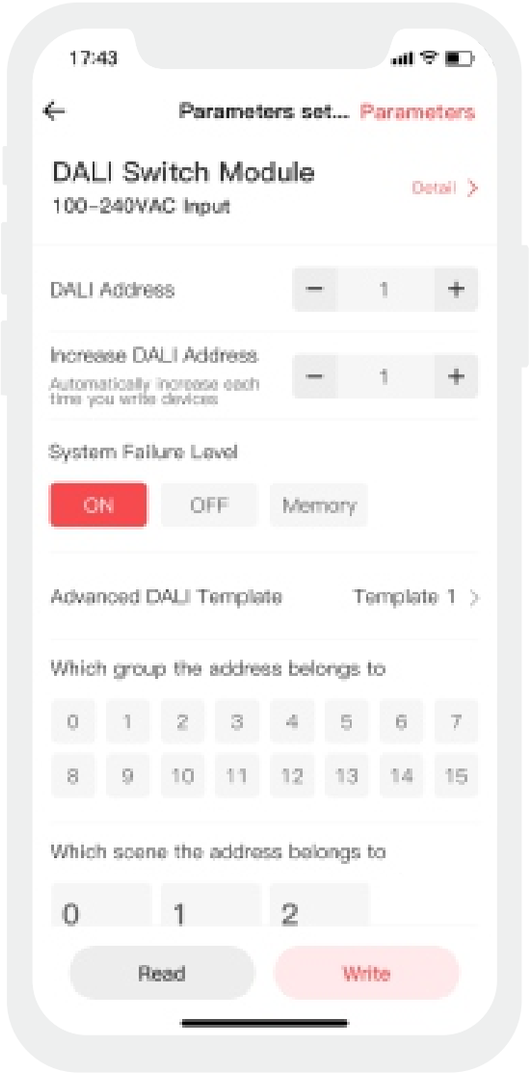

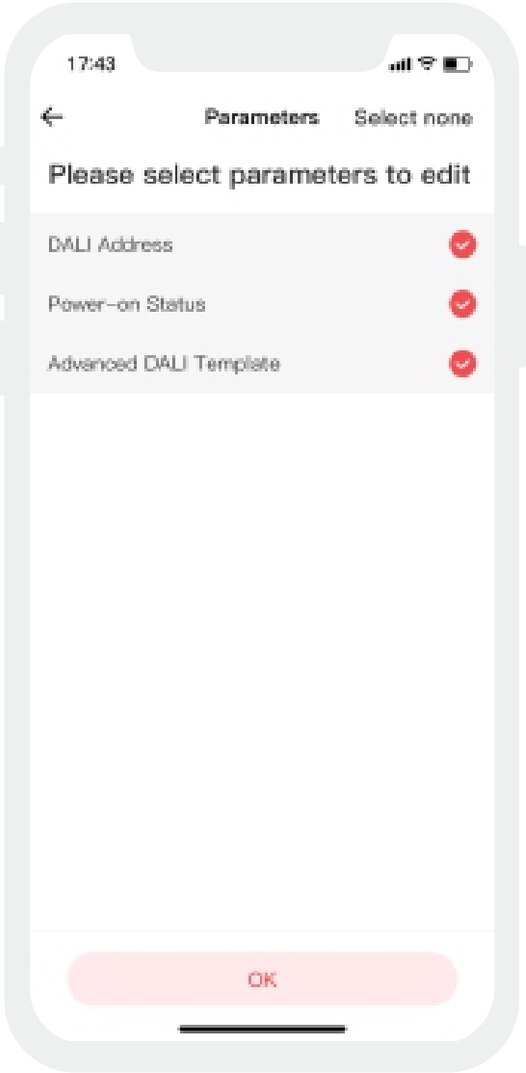

3. Advanced DALI template settings

Click the “Local DALI Advanced Template” option on the settings page, then click “Batch edit” and select the “Switch” type. This will allow you to control the device when calling the DALI advanced template.

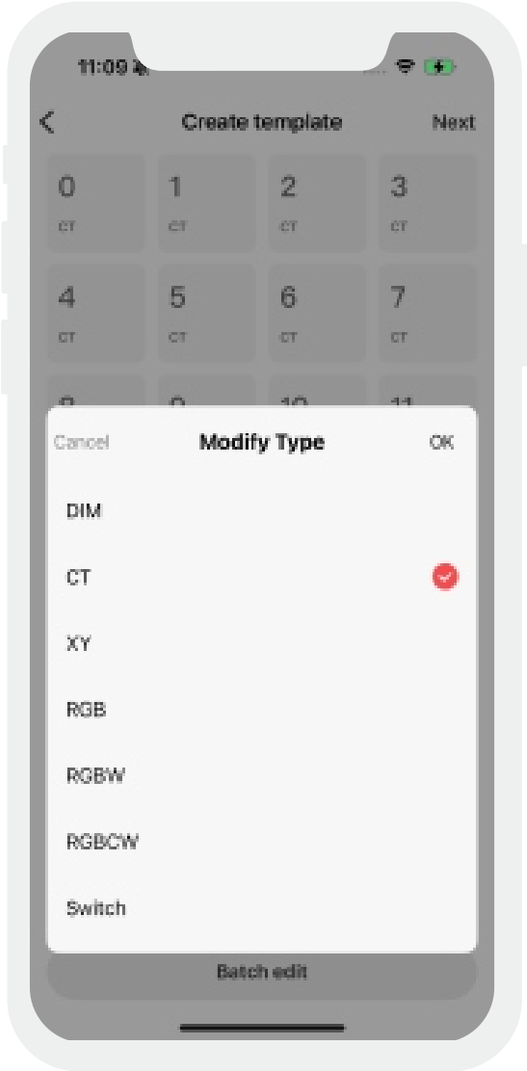

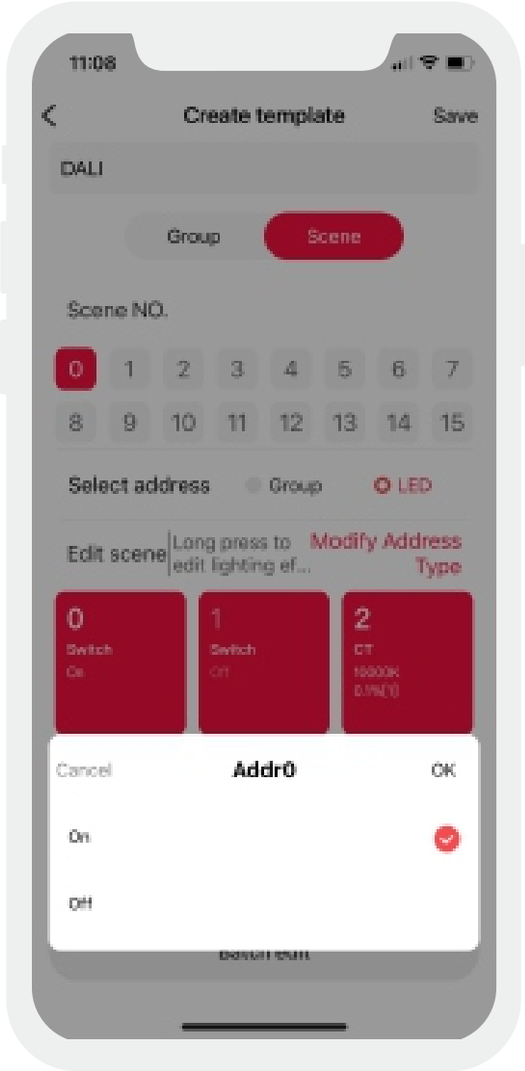

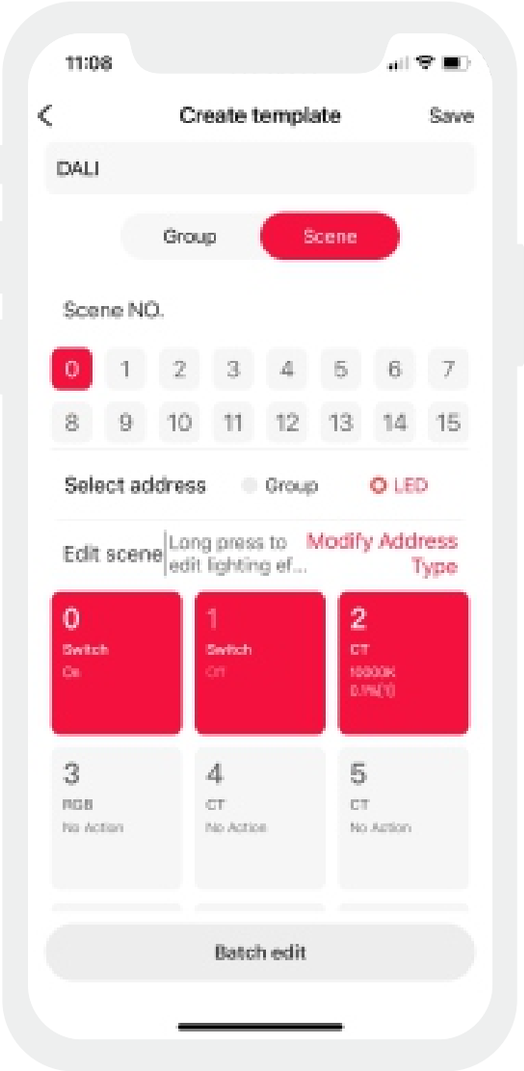

Attention

- Product installation and commissioning should be done by a qualified professional.
- Our company products are and not lightningproof non-waterproof(special models excepted). Please avoid the sun and rain. When installed outdoors, please ensure they are mounted in a waterproof enclosure or in an area equipped with lightning protection devices.
- Good heat dissipation will prolong the working life of products. Please ensure good ventilation.
- Please check if the working voltage used complies with the parameter requirements of products.
- The diameter of wire used must be able to load the light fixtures you connect and ensure the firm wiring.
- Before you power on products, please make sure all the wiring is correct in case of incorrect connection that causes damage to light fixtures.
- If a fault occurs, please do not attempt to fix products by yourself. If you have any question, please contact your suppliers.

＊This manual is subject to changes without further notice. Product functions depend on the goods. Please feel free to contact our official distributors if you have any question.

Warranty Agreement

- Warranty periods from the date of delivery: 5 years.
- Free repair or replacement services for quality problems are provided within warranty periods.

Warranty exclusions below:

Following conditions are not within the guarantee range of free repairing or replacement services:

- Beyond warranty periods.
- Any artificial damage caused by high voltage, overload, or improper operations.
- Products with severe physical damage.
- Damage caused by natural disasters and force majeure.
- Warranty labels and barcodes have been damaged.
- No any contract signed by our company.

1. Repair or replacement provided is the only remedy for customers. Our company is not liable for any incidental or consequential damage unless it is within the law.
2. Our company has the right to amend or adjust the terms of this warranty, and release in written form shall prevail.

DALI通断器模块

型号: KDS-C

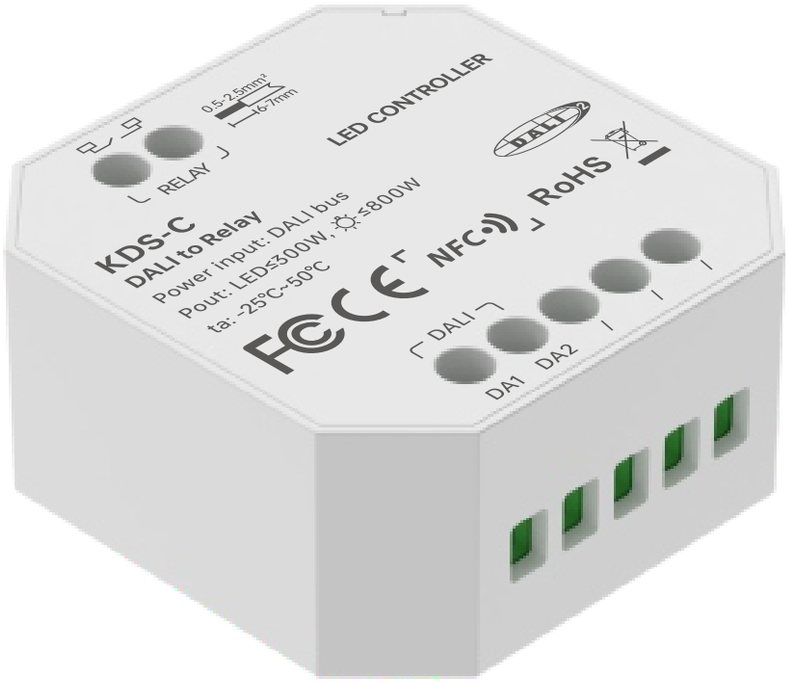

使 用 说 明 书

接线应用

1.控制100-240Vac负载接线方式

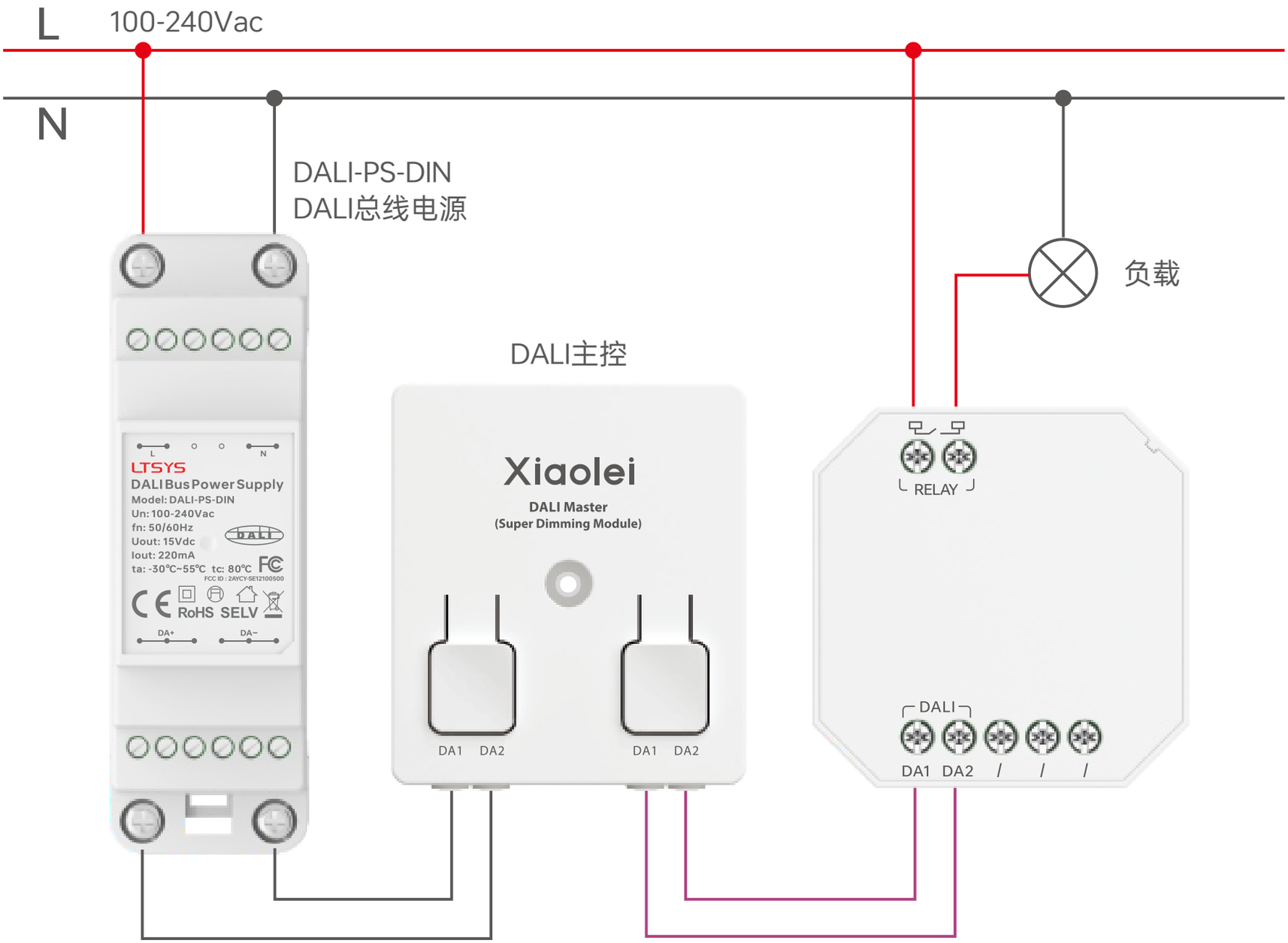
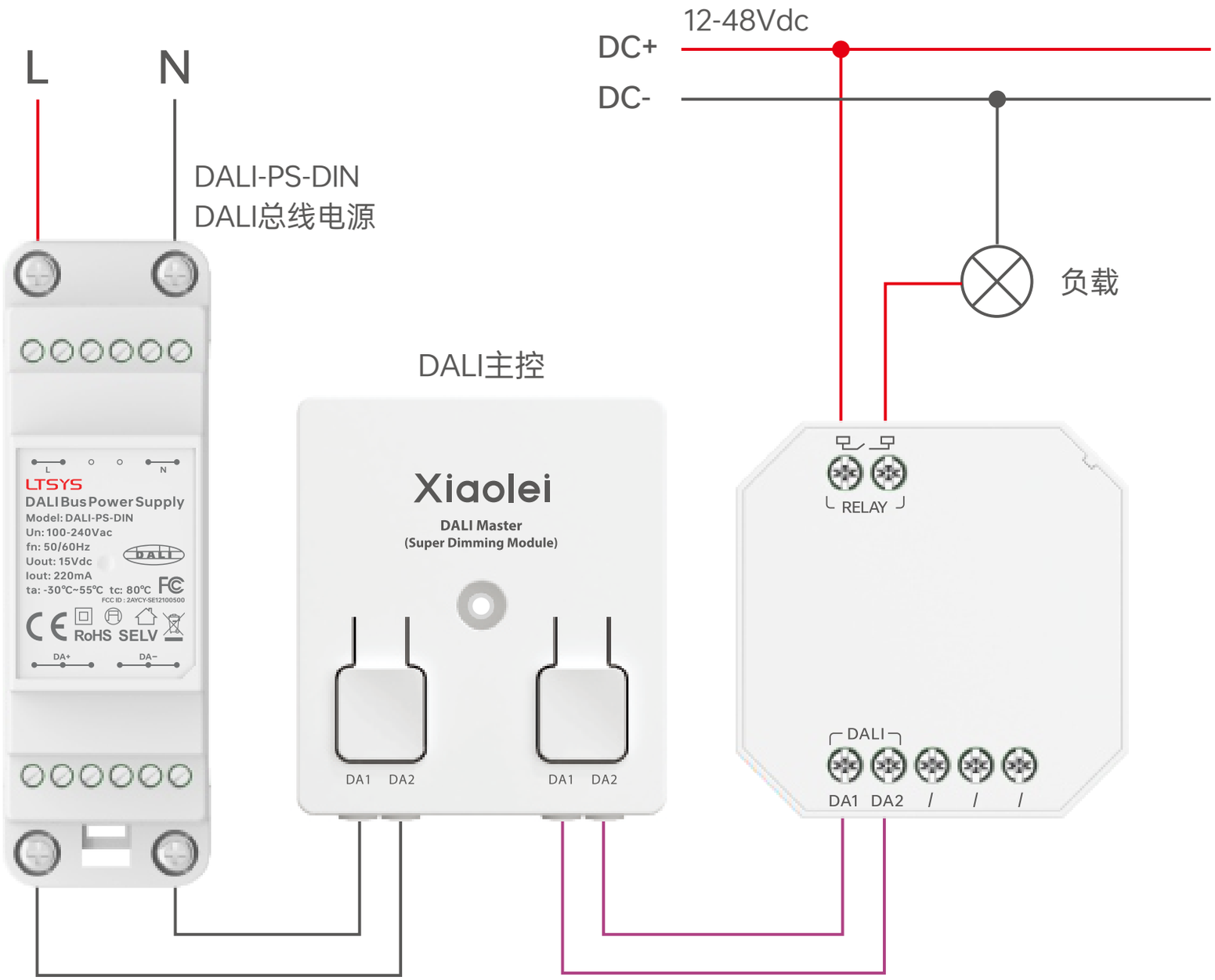
2.控制12-48Vdc负载接线方式