RGBW LED Remote Controller

- Featuring a streamlined design with magnetic attachment, it is powered by two AAA batteries ;
- Features 2.4 GHz RF wireless transmission with stable signal transmission and strong anti-interference capabilities, supporting multi-zone synchronized dimming;
- Compatible with P-series controllers;
- Supports zone control with two options: 4-zone and 8-zone configurations;
- Equipped with a dedicated on/off button for one-touch control of the lights;
- Quick color adjustment via touch color ring, with independent R/G/B/W channel control for precise color tuning.
- Pre-stored 9 dynamic and 7 static lighting modes, supporting customized programming of dynamic modes.
- Comes with 4 preset scene modes that can be quickly accessed; you can also save custom scenes by holding down the button;
- A single remote control can be used with multiple controllers, and a single controller can be paired with up to 10 remote controls;
- Supports synchronized dimming across controller groups.

C4F C4E

Technical Specifications

Model	C4F	C4E
Area Control	Zone 4	Zone 8
Dimming Type	RGB/RGBW	
Wireless Type	RF 2.4GHz	
Operating Voltage	3Vdc, AAA batteries × 2 Note: Batteries are sold separately.	
Standby Current	< 5uA	
Compatible Controllers	P3 / P4 / P5	
Operating Temperature	-25℃~50℃	
Product Weight	Remote control: 62 g; Mount: 12 g	
Dimensions	Remote control: L150 × W48 × H15.5 mm; Mount: L85 × W35 × H20 mm	

CE FC RoHS

Dimensions

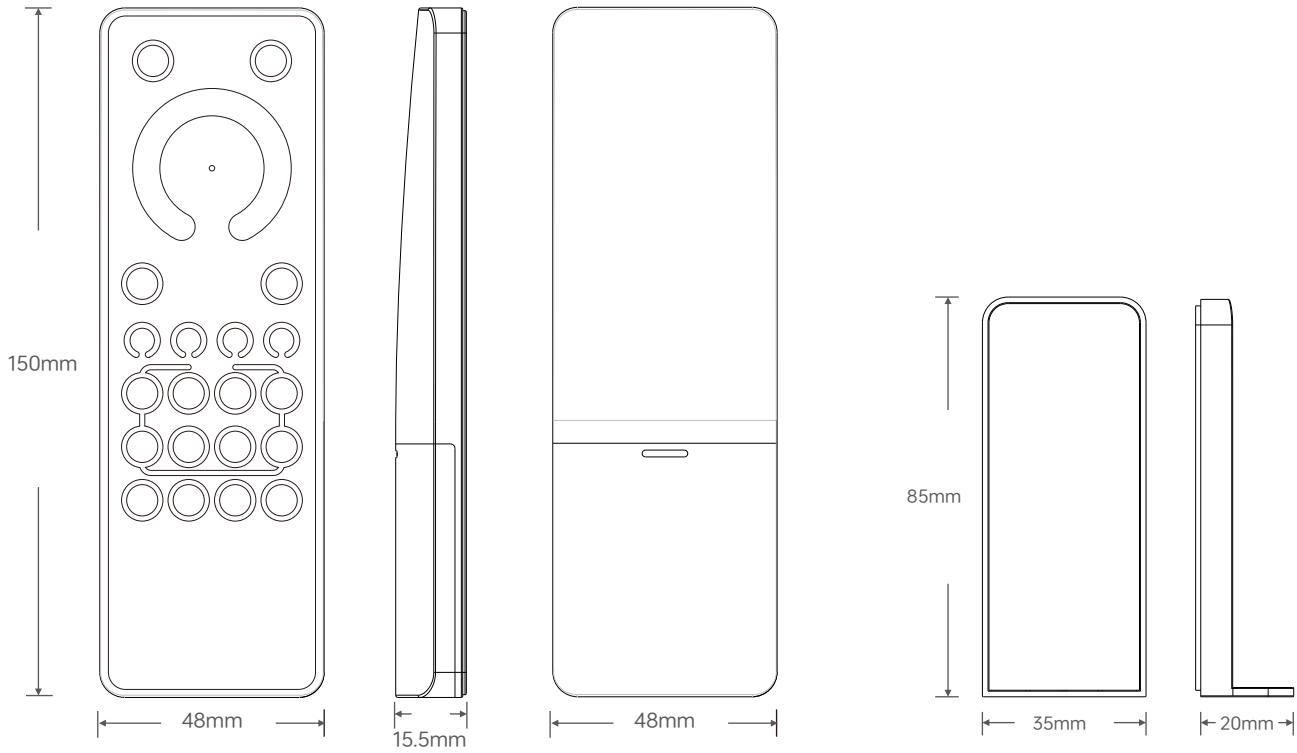

Remote Control

Magnetic Mount

Product Installation

①Open the battery compartment on the remote control and insert two AAA batteries, making sure to insert them with the correct polarity.

②Peel off the protective film from the included double-sided tape, attach the magnetic mount to the wall, and press firmly to secure it (let it sit for 24 hours to ensure a secure bond before placing the remote control on it to prevent it from falling off).

③Attach the remote control to the magnetic mount to complete the installation.

Functions of the 4-Zone Buttons

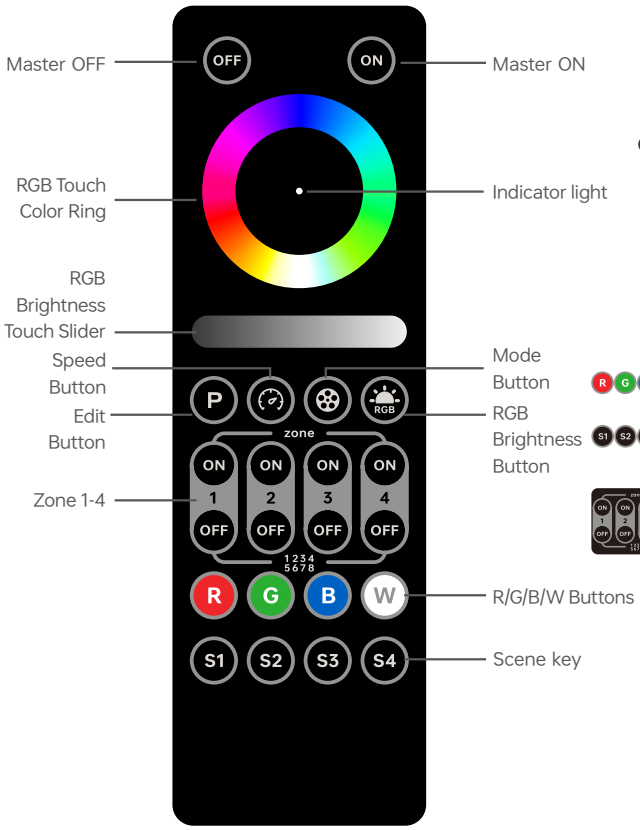

C4F

Function Key Usage:

- **ON Button:** Press briefly to turn on all lights; press and hold for 2 seconds to enter the pairing mode.
- **OFF Button:** Press briefly to turn off all lights.
- **RGB Touch Color Ring:** Touch to adjust the color of the selected zone.
- **RGB Brightness Touch Slider:** Touch to adjust the brightness of the selected zone.
- **Speed Button:** Short press to adjust speed between levels 1–8; long press to incrementally increase or decrease speed. There are 8 adjustable levels in total, with level 5 as the default.
- **Edit Button:** Short press to cycle through dynamic modes; long press to enter dynamic mode editing.
- **Mode Button:** Short press to cycle through 9 dynamic modes and 7 static modes; long press to auto-play all dynamic modes.
- **RGB Brightness Button:** Press briefly to turn RGB brightness on or off; press and hold to continuously adjust RGB brightness.
- **R/G/B/W Buttons:** Press briefly to enable or disable the R/G/B/W channels; press and hold to adjust the brightness of the R/G/B/W channels.
- **Scene Button:** Press briefly to recall a scene; press and hold for 2 seconds to save the current lighting state to a scene, accompanied by the indicator light flashing red twice.

Zone 1-4 Buttons:

① Press the Zone ON button briefly to select and turn on the lights in the current zone; press the Zone OFF button briefly to turn off the lights in the current zone.

② Rapidly press the ON buttons for multiple zones in succession to select them simultaneously. You can then control the selected zones in sync. (Note: If you press any button for a zone that is already part of a multi-zone selection, only that zone will remain selected.)

③ After the remote control enters sleep mode, it retains the zone selections made before sleep.

Indicator light: The indicator light changes in sync with adjustments to color and brightness.

Note: ① If the indicator light on the remote control does not light up when a button is pressed, the batteries may be dead. Please replace the batteries promptly.
② If no buttons are pressed for 6 seconds, the remote control will enter sleep mode. Press any button to wake it up.

How to Use Edit Mode: (Select Dynamic Mode → Go to Edit → Select colors one by one → Choose Dynamic Effect → Save and Exit)

Step 1: Select a Mode: Briefly press the Mode button to select the dynamic mode you want to customize.

Step 2: Enter Edit Mode: Press and hold the Edit button P until the indicator light flashes green slowly, indicating that you have entered edit mode.

Step 3: Select Colors: Touch the color ring or RGB buttons R G B to select a color, then press and hold one of the numbered buttons 1–8 at the bottom to save the currently selected color (as shown in the image on the right).Use the same method to select colors for other buttons (if a button has not been assigned a color previously, it defaults to black; if a color is assigned to a button that has not been set, the change will not take effect).

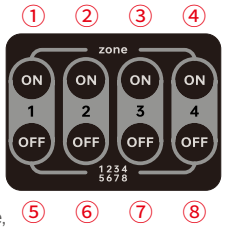

Step 4: Select dynamic effects: Briefly press the Edit button P to cycle through four dynamic effects for the selected color (fade, jump, strobe, and fade in/out).

Example 1: ① Red ② Green ③ Blue ④ Yellow ⑤ Purple ⑥ Cyan ⑦ White ⑧ Null
Red, Green, Blue, Yellow, Purple, Cyan, White — 7-color gradient

Example 2: ① Red ② Blue ③ Null ④ Null ⑤ Null ⑥ Null ⑦ Null ⑧ Null
Red and Blue — 2-color Fade

Example 3: ① Red ② Black ③ Green ④ Black ⑤ Blue ⑥ Null ⑦ Null ⑧ Null
Red, Black, Green, Black, Blue — 3-color strobe

Example 4: ① Black ② Red ③ Black ④ Green ⑤ Black ⑥ Blue ⑦ Null ⑧ Null
Black, Red, Black, Green, Black, Blue — 3 colors, fading in and out

Note: R + B = purple, R + G = yellow, G + B = cyan, R + G + B = white, R, G, and B all off = black.

Step 5: Save and Exit: Press and hold the Edit button P to save the current custom settings and replace the selected dynamic mode. This will also exit edit mode, and the green indicator light will turn off.

To reset the dynamic modes: Press and hold the "Mode" and "Edit" buttons on the remote control simultaneously for about 6 seconds. The indicator light will begin to pulse green until it flashes twice, indicating that all dynamic modes have been successfully reset.

Note: In edit mode, press and hold the mode button to exit edit mode without saving the current animation.

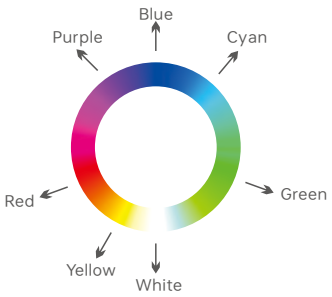

Color	R/G/B values
Red	R100% G0% B0%
Yellow	R100% G100% B0%
Green	R0% G100% B0%
Cyan	R0% G100% B100%
Blue	R0% G0% B100%
Purple	R100% G0% B100%
White	R100% G100% B100%

Preset Dynamic mode	1	Red-purple gradient	Static mode	10	Red
	2	Blue-purple gradient		11	Green
	3	Color temperature gradient (warm yellow, cool white)		12	Blue
	4	Three-color gradient (RGB)		13	Yellow
	5	Six-color gradient (red, green, blue, yellow, purple, cyan)		14	Purple
	6	Seven colors changing (red, green, blue, yellow, purple, cyan, white)		15	Cyan
	7	Seven-color gradient (red, green, blue, yellow, purple, cyan, white)		16	Mixed light white
	8	Three-color gradient (RGB)			
	9	White gradually brightens and darkens			

Functions of the 8-Zone Buttons

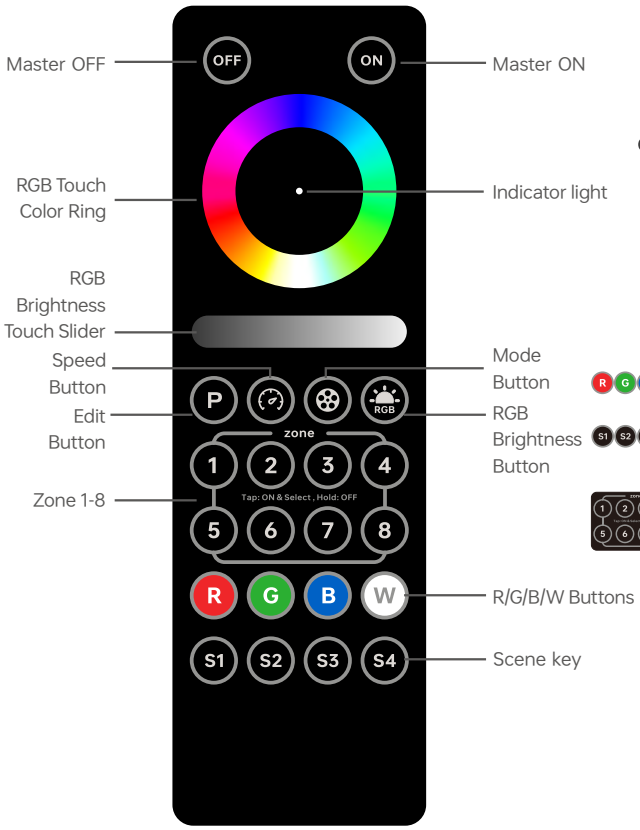

C4E

Function Key Usage:

- **ON Button:** Press briefly to turn on all lights; press and hold for 2 seconds to enter the pairing mode.
- **OFF Button:** Press briefly to turn off all lights.
- **RGB Touch Color Ring:** Touch to adjust the color of the selected zone.
- **RGB Brightness Touch Slider:** Touch to adjust the brightness of the selected zone.
- **Speed Button:** Short press to adjust speed between levels 1–8; long press to incrementally increase or decrease speed. There are 8 adjustable levels in total, with level 5 as the default.
- **Edit Button:** Short press to cycle through dynamic modes; long press to enter dynamic mode editing.
- **Mode Button:** Short press to cycle through 9 dynamic modes and 7 static modes; long press to auto-play all dynamic modes.
- **RGB Brightness Button:** Press briefly to turn RGB brightness on or off; press and hold to continuously adjust RGB brightness.
- **R/G/B/W Buttons:** Press briefly to enable or disable the R/G/B/W channels; press and hold to adjust the brightness of the R/G/B/W channels.
- **Scene Button:** Press briefly to recall a scene; press and hold for 2 seconds to save the current lighting state to a scene, accompanied by the indicator light flashing red twice.

Zone 1-8 Buttons:

① Press the Zone ON button briefly to select and turn on the lights in the current zone; press the Zone OFF button briefly to turn off the lights in the current zone.

② Rapidly press the ON buttons for multiple zones in succession to select them simultaneously. You can then control the selected zones in sync. (Note: If you press any button for a zone that is already part of a multi-zone selection, only that zone will remain selected.)

③ After the remote control enters sleep mode, it retains the zone selections made before sleep.

Indicator light: The indicator light changes in sync with adjustments to color and brightness.

Note: ① If the indicator light on the remote control does not light up when a button is pressed, the batteries may be dead. Please replace the batteries promptly.
② If no buttons are pressed for 6 seconds, the remote control will enter sleep mode. Press any button to wake it up.

How to Use Edit Mode: (Select Dynamic Mode → Go to Edit → Select colors one by one → Choose Dynamic Effect → Save and Exit)

Step 1: Select a Mode: Briefly press the Mode button to select the dynamic mode you want to customize.

Step 2: Enter Edit Mode: Press and hold the Edit button P until the indicator light flashes green slowly, indicating that you have entered edit mode.

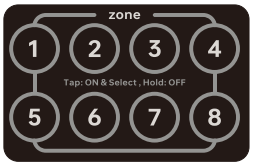

Step 3: Select Colors: Touch the color ring or RGB buttons R G B to select a color, then press and hold the 1–8 zone buttons to temporarily save the currently selected color (as shown in the image on the right).Use the same method to select colors for other buttons (if a button has not been assigned a color previously, it defaults to black; if a color is assigned to a button that has not been set, the change will not take effect).

Step 4: Select dynamic effects: Briefly press the Edit button P to cycle through four dynamic effects for the selected color (fade, jump, strobe, and fade in/out).

Example 1:

①	②	③	④	⑤	⑥	⑦	⑧
Red	Green	Blue	Yellow	Purple	Cyan	White	Null

Red, Green, Blue, Yellow, Purple, Cyan, White — 7-color gradient

Example 2:

①	②	③	④	⑤	⑥	⑦	⑧
Red	Blue	Null	Null	Null	Null	Null	Null

Red and Blue — 2-color Fade

Example 3:

①	②	③	④	⑤	⑥	⑦	⑧
Red	Black	Green	Black	Blue	Null	Null	Null

Red, Black, Green, Black, Blue — 3-color strobe

Example 4:

①	②	③	④	⑤	⑥	⑦	⑧
Black	Red	Black	Green	Black	Blue	Null	Null

Black, Red, Black, Green, Black, Blue — 3 colors, fading in and out

Note: R + B = purple, R + G = yellow, G + B = cyan, R + G + B = white, R, G, and B all off = black.

Step 5: Save and Exit: Press and hold the Edit button P to save the current custom settings and replace the selected dynamic mode. This will also exit edit mode, and the green indicator light will turn off.

To reset the dynamic modes: Press and hold the "Mode" and "Edit" buttons on the remote control simultaneously for about 6 seconds. The indicator light will begin to pulse green until it flashes twice, indicating that all dynamic modes have been successfully reset.

Note: In edit mode, press and hold the mode button to exit edit mode without saving the current animation.

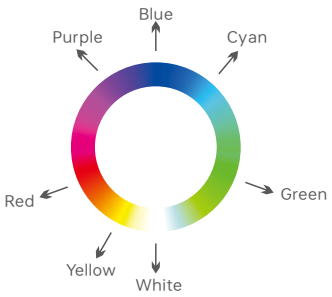

Color	R/G/B values
Red	R100% G0% B0%
Yellow	R100% G100% B0%
Green	R0% G100% B0%
Cyan	R0% G100% B100%
Blue	R0% G0% B100%
Purple	R100% G0% B100%
White	R100% G100% B100%

Preset Dynamic mode	1	Red-purple gradient	Static mode	10	Red
	2	Blue-purple gradient		11	Green
	3	Color temperature gradient (warm yellow, cool white)		12	Blue
	4	Three-color gradient (RGB)		13	Yellow
	5	Six-color gradient (red, green, blue, yellow, purple, cyan)		14	Purple
	6	Seven colors changing (red, green, blue, yellow, purple, cyan, white)		15	Cyan
	7	Seven-color gradient (red, green, blue, yellow, purple, cyan, white)		16	Mixed light white
	8	Three-color gradient (RGB)			
	9	White gradually brightens and darkens			

Wiring Diagram for the 4-Zone Remote Control

C4F

C4F

1 Zone

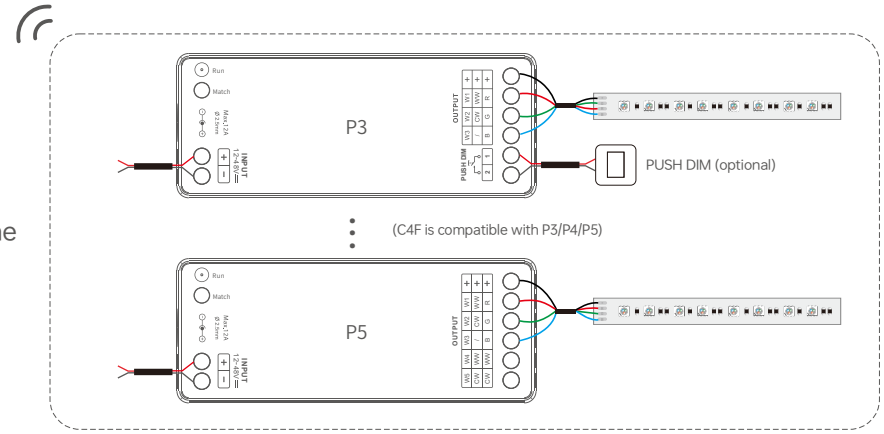

2 Zone

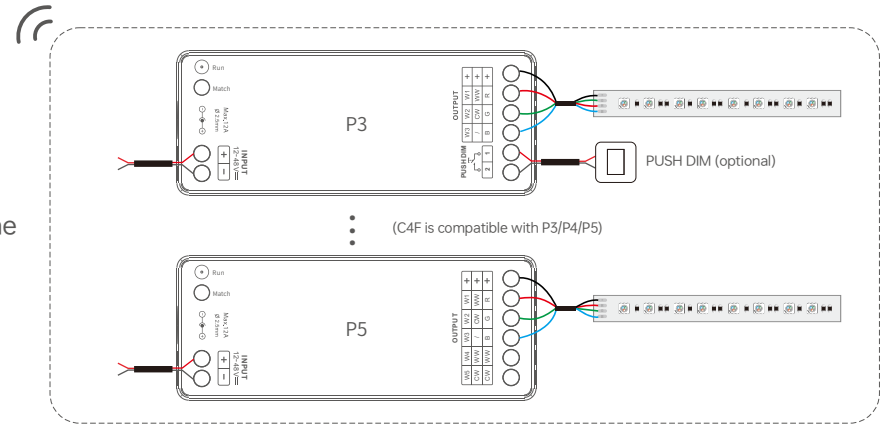

3 Zone

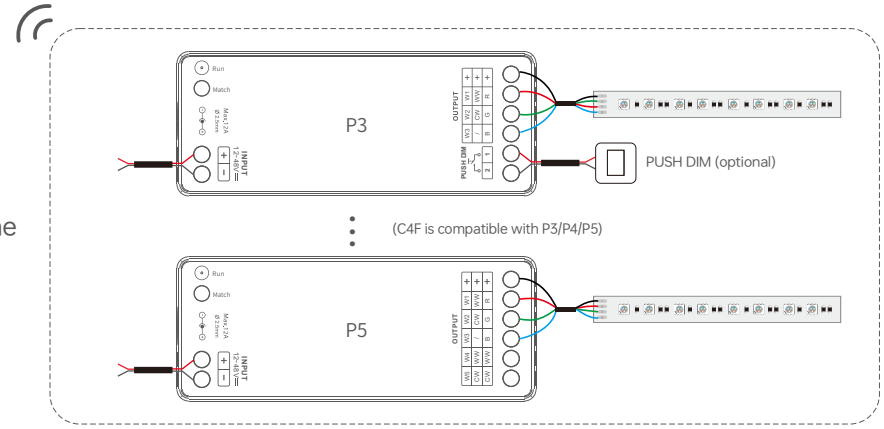

4 Zone

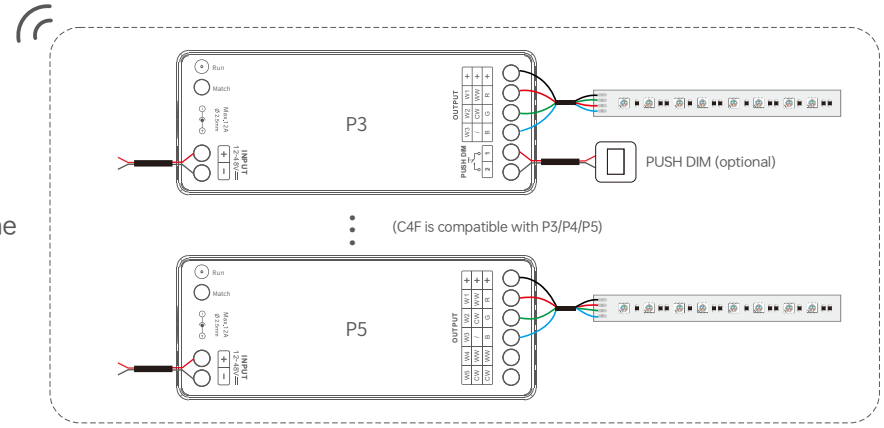

*Compatible with up to 10 remote controls

Wiring Diagram for the 8-Zone Remote Control

C4E

C4E

1 Zone

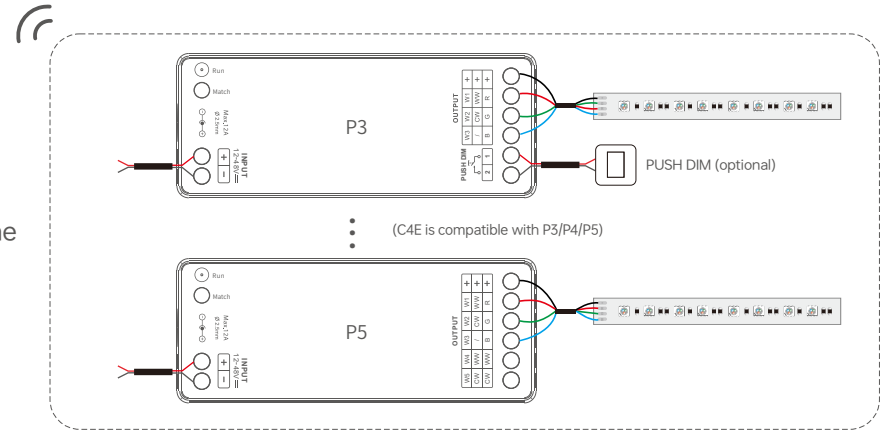

2 Zone

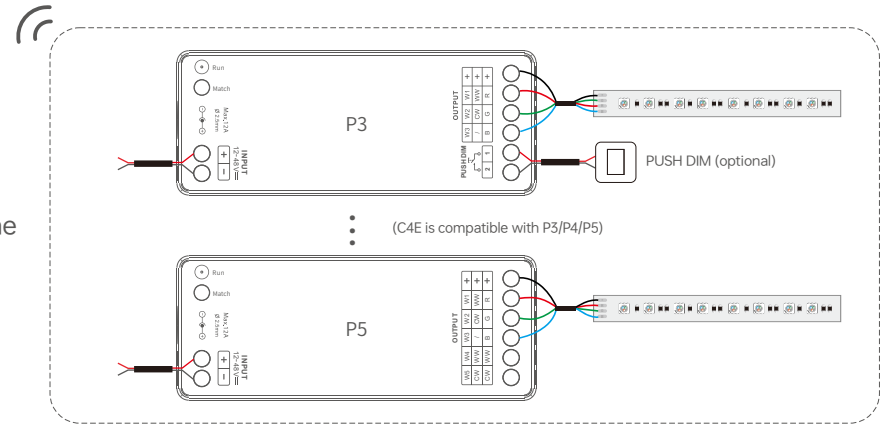

3 Zone

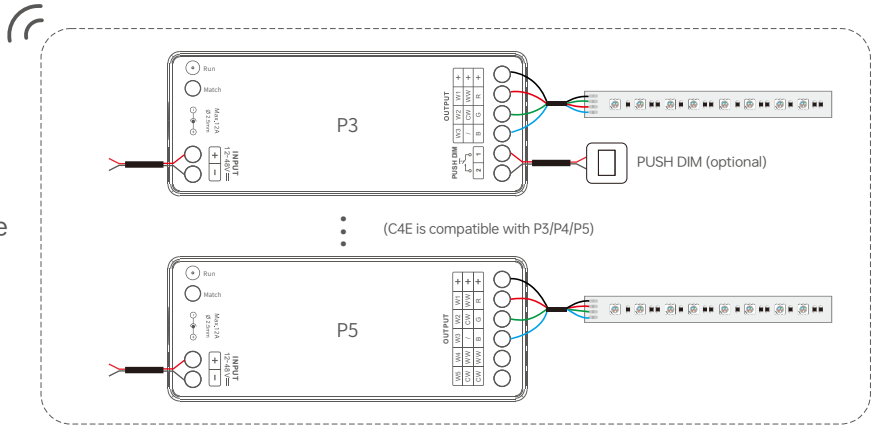

8 Zone

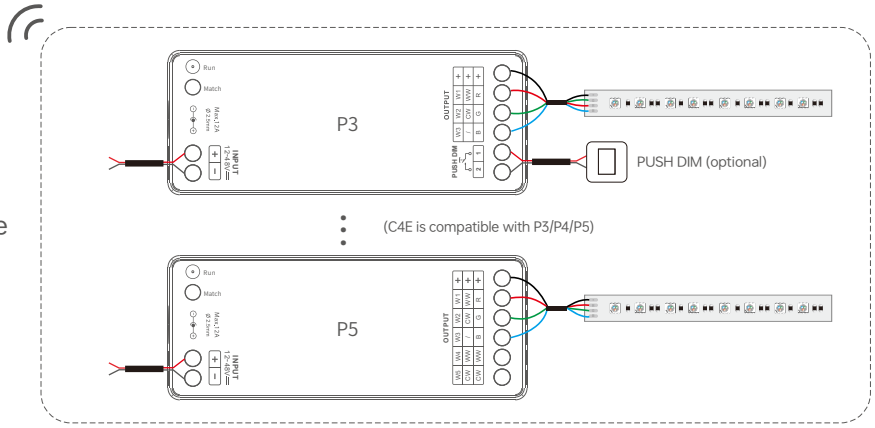

*Compatible with up to 10 remote controls

For use with P-series Controllers

Key pairing code

1. Short press the ID learning button on the controller. The load indicator will flash. Please complete the following steps within 10 seconds.

2. Pairing the remote control:
Press and hold the ON button on the remote control for 2 seconds until the indicator light flashes slowly. Then, briefly press the zone ON button on the 4-zone remote control and the zone button on the 8-zone remote control until the controller's load indicator flashes rapidly and then remains lit, and the color ring changes when touched. This indicates that the learning process was successful.

Power-on code pairing

1. After the controller has been powered off and then powered back on, please complete the following steps within 10 seconds.

2. Pairing the remote control:
Press and hold the ON button on the remote control for 2 seconds until the remote's indicator light flashes slowly. Then, short press the zone ON button on the 4-zone remote control or the zone button on the 8-zone remote control until the controller's load indicator flashes rapidly and then remains lit, and the color ring changes when touched. This indicates that the learning process was successful.

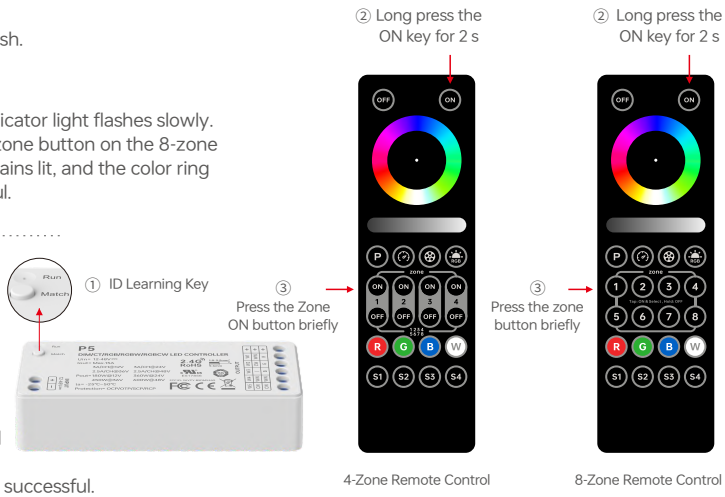

Note: A single controller can pair with up to 10pcs remote controls. If more than 10pcs remote controls are paired, the ID code of the first remote control will be automatically deleted.

Clear code

To delete all remote controls:
Press and hold the controller ID learning button for 6 seconds. The controller load light will flash 4 times quickly and then stay on, indicating successful code clearing

Use the Remote Controls Together

Code pairing (assuming B learns from A)

1. Press and hold the ON and OFF buttons on the top of the remote control simultaneously until the indicator light stays on, then release them.
2. Within 5 seconds, press any button on Remote A; the indicator light on Remote B will turn off, indicating that programming was successful.

*Assuming Remote Control A has already been paired with the controller, if you program Remote Control B to mimic Remote Control A, Remote Control B can be used to control the system directly without needing to be paired with the controller;
*Only remotes of the same model can be programmed to mimic each other.

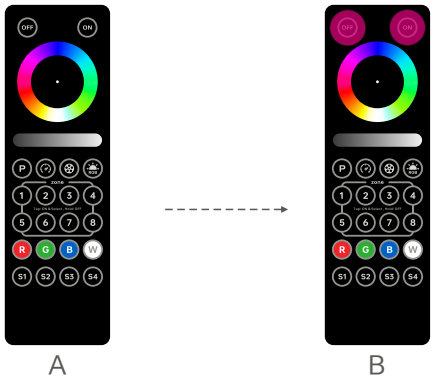

Clear code

Press and hold the S1 and S4 buttons on the B remote control simultaneously for about 10 seconds; when the indicator light flashes three times, the programmed remote control code will be cleared.

Transportation and Storage

1. Transportation

Products can be shipped via vehicles, boats and planes.

During transportation, products should be protected from rain and sun. Please avoid severe shock and vibration during the loading and unloading process.

2. Storage

The storage conditions should comply with the Class I Environmental Standards. The products that have been stored for more than six months are recommended to be re-inspected and can be used only after they have been qualified.

Attentions

- Please use in a dry indoor environment;
- When installing the battery, please connect the positive and negative terminal correctly. If the remote will not be used for a long period, take the battery out;
- When the remote distance is shorten and or the remote doesn't work frequently, please change the battery in time;
- Please carefully take it and put it down to prevent falls that cause damage;
- If a fault occurs, please do not attempt to fix products by yourself. If you have any question, please contact your suppliers.

⁎ This manual is subject to changes without further notice. Product functions depend on the goods. Please feel free to contact our official distributors if you have any question.

Warranty Agreement

- Warranty period: 5 years from the date of manufacture.
- Free repair or replacement services for quality problems are provided within warranty periods.

Warranty exclusions below:

Following conditions are not within the guarantee range of free repairing or replacementservices:

- Beyond warranty periods;
- Any artificial damage caused by high voltage, overload, or improper operations;
- Products with severe physical damage;
- Damage caused by natural disasters and force majeure;
- Warranty labels and barcodes have been damaged.
- No any contract signed by our company.

1. Repair or replacement provided is the only remedy for customers. Our company is not liable for any incidental or consequential damage unless it is within the law.

2. Our company has the right to amend or adjust the terms of this warranty, and release in written form shall prevail.

Update Log

Version	Updated Time	Update Conten	Updated by
A0	20260423	Original version	Haipeng Li