DALI to 0/1-10V Module

Model: KDA

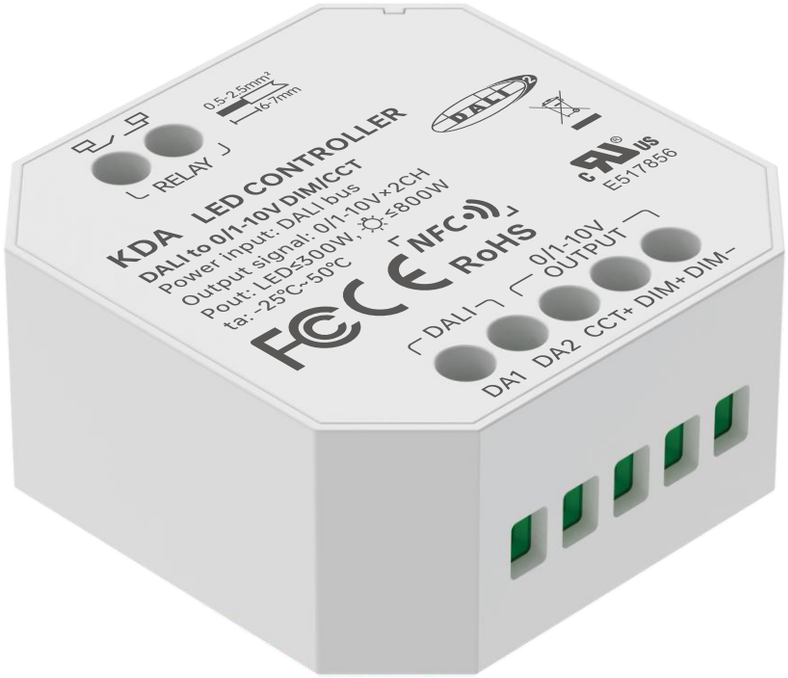

Manual

Product Introduction

- Converts DALI signals to 0/1-10V signals, enabling adjustable brightness and color temperature;
- Built-in Omron relay allows complete shutdown of 0/1-10V lighting output devices for enhanced stability and reliability;
- NFC programming facilitates easy configuration of DALI dimming interface, DALI address, dimming ramp time, and other parameters with simplified operation;
- The 0/1-10V output signal can be easily configured via NFC into multiple output modes to meet single-channel dimming, dual-channel independent dimming, and dual-channel dual-color temperature combination requirements;
- Features an integrated design combining power supply and communication modules for easier installation.

Technical Specs

Model	KDA
Peak current	70mA@16V
Static current	5mA@16V
Power supply mode	DALI Bus power supply
Input signal	DALI-2
Output signal	0/1-10V×2CH，Max.15mA
Max. load current of the relay	5A
Max. load parameters of the relay	Resistive load: 800W@230Vac，400W@110Vac，200W@48Vdc Capacitive load: 300W@230Vac，150W@110Vac，100W@48Vdc
Switch maximum voltage	AC: 250V，DC: 48V
Relay surge current	70A@10ms
Working temperature	-25°C~50°C
Product size	L45×W45.5×H20.5(mm)
Product weight	30g
Standards	UL 8750、EN 61347-2-13:2014+A1:2017、EN 61347-1:2015+A1:2021、EN 62493:2015/A1:2022、IEC62386-101、IEC62386-102、IEC62386-206

E517856

Product Images

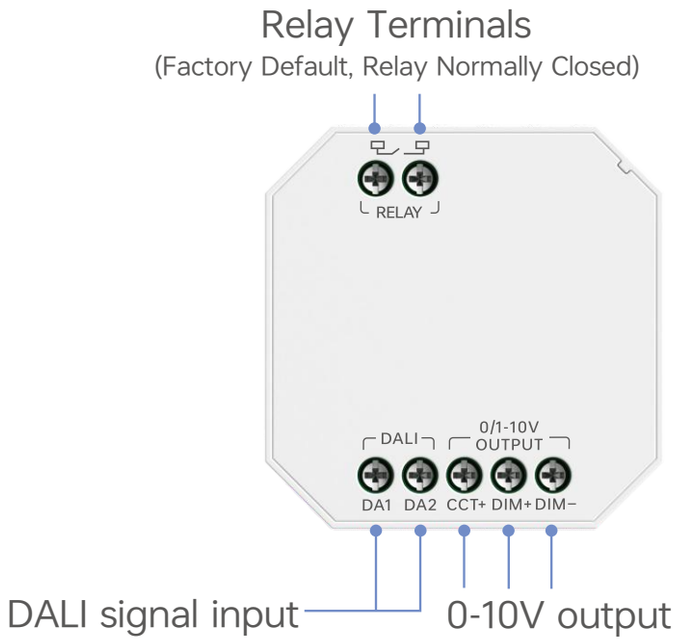

Product Size

Unit: mm

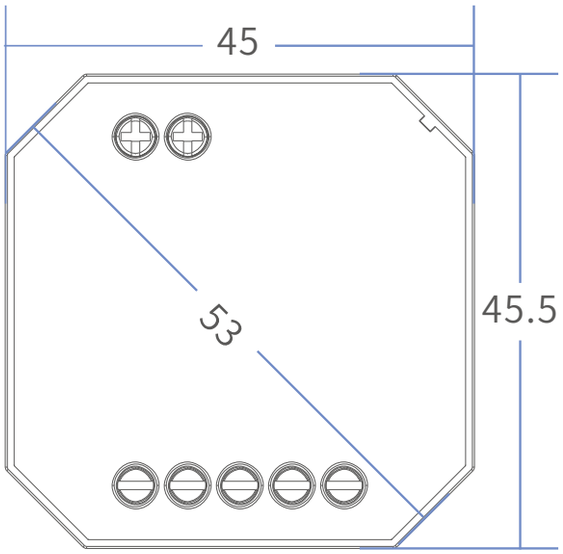

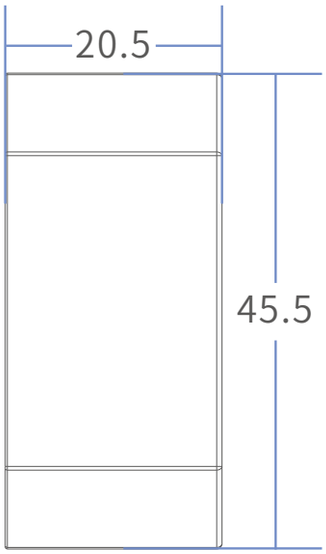

Wiring Application

1.Simultaneously connect the relay and 0/1-10V output to achieve switching control of 0/1-10V color temperature loads powered by 100-240Vac (single-address dual-channel color temperature mode).

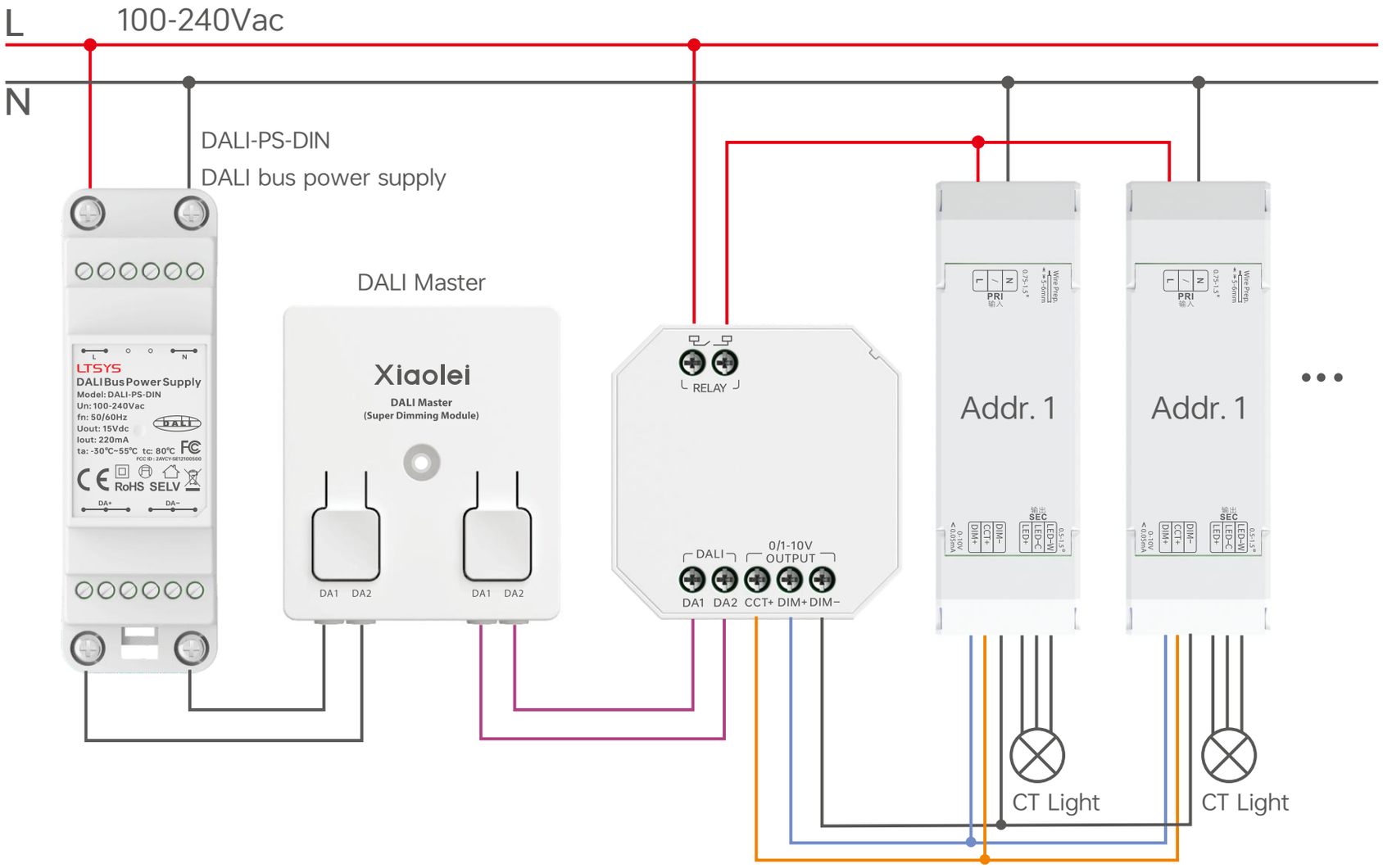

*If the load exceeds the maximum power rating or the inrush current exceeds 70A, the relay can be connected to a higher-power contactor for switching control. Refer to P11 for wiring applications.

2. Simultaneously connect the relay and 0/1-10V output to achieve switch control of 0/1-10V dimmable loads powered by 100-240Vac (single-address, single-channel dimming mode).

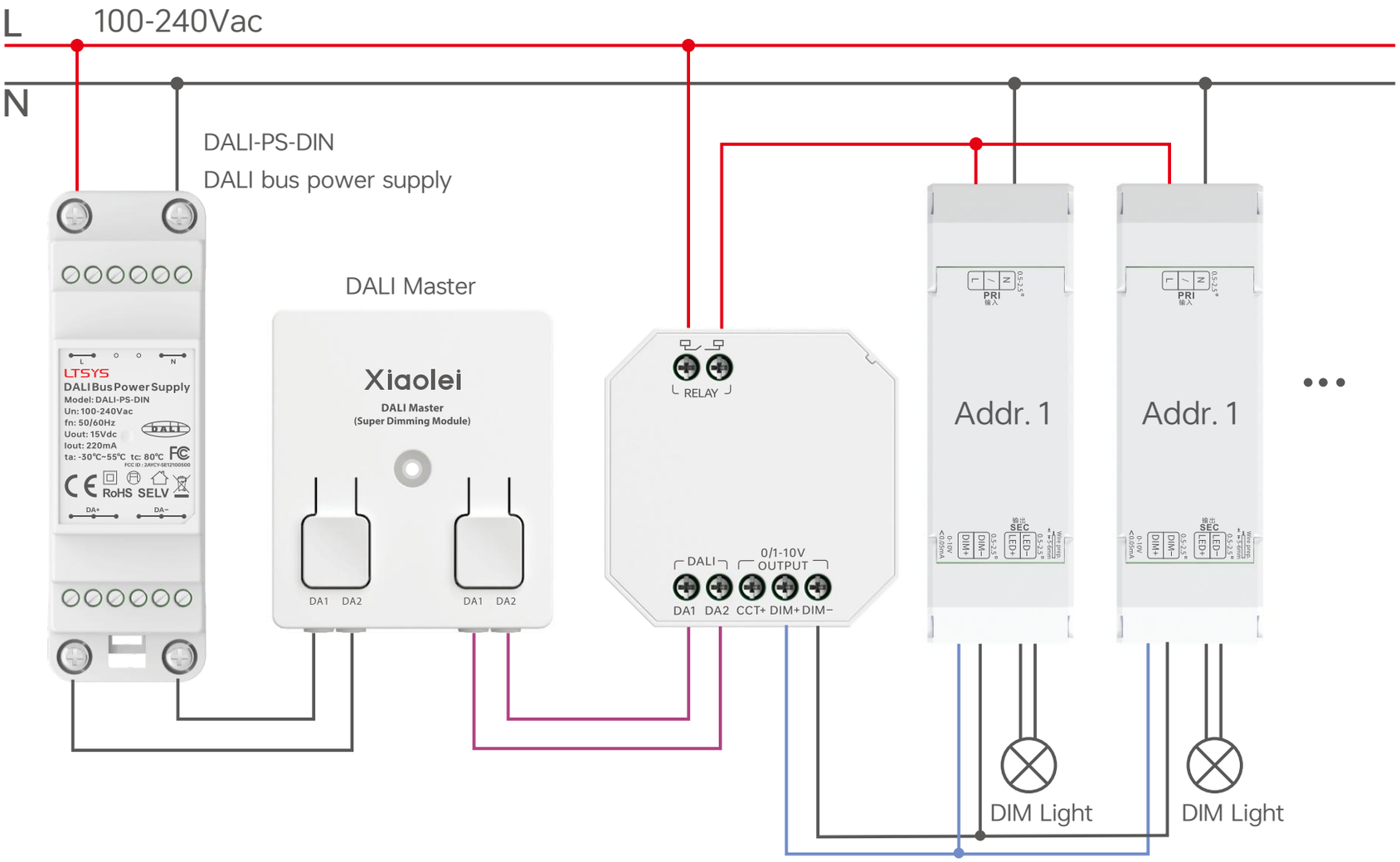

*If the load exceeds the maximum power rating or the inrush current exceeds 70A, the relay can be connected to a higher-power contactor for switching control. Refer to P11 for wiring applications.

3. Simultaneously connect the relay and 0/1-10V output to achieve switch control of 0/1-10V dimmable loads powered by 12-48Vdc (dual-address dual-channel dimming mode).

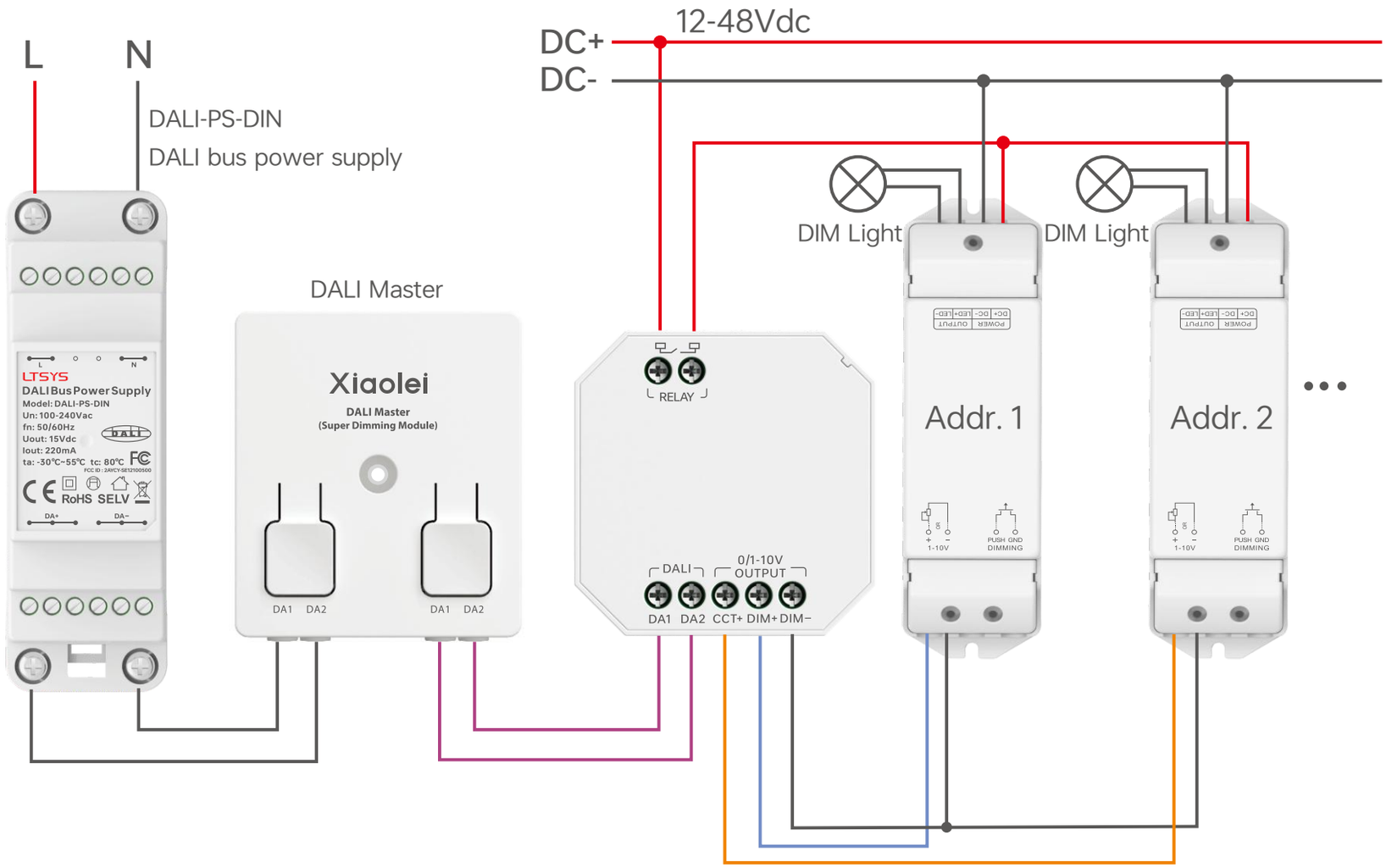

*If the load exceeds the maximum power rating or the inrush current exceeds 70A, the relay can be connected to a higher-power contactor for switching control. Refer to P11 for wiring applications.

4. Simultaneously connect the relay and 0/1-10V output to achieve switch control of 0/1-10V dimmable loads powered by 100-240Vac (dual-address dual-channel dimming mode).

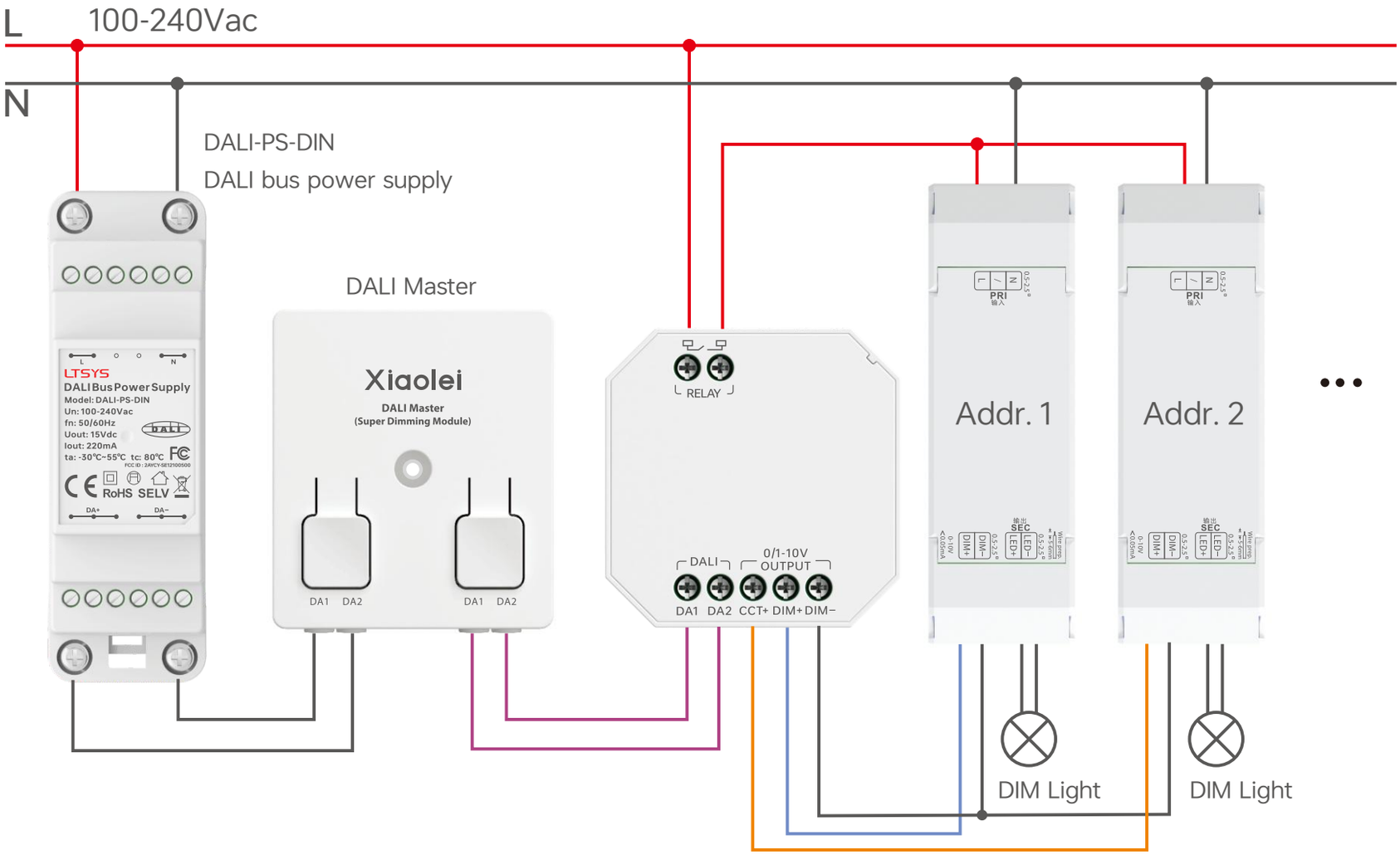

*If the load exceeds the maximum power rating or the inrush current exceeds 70A, the relay can be connected to a higher-power contactor for switching control. Refer to P11 for wiring applications.

5. Connect the 0/1-10V output to enable switch control of 0/1-10V color temperature loads powered by 100-240Vac (single-address dual-channel color temperature mode).

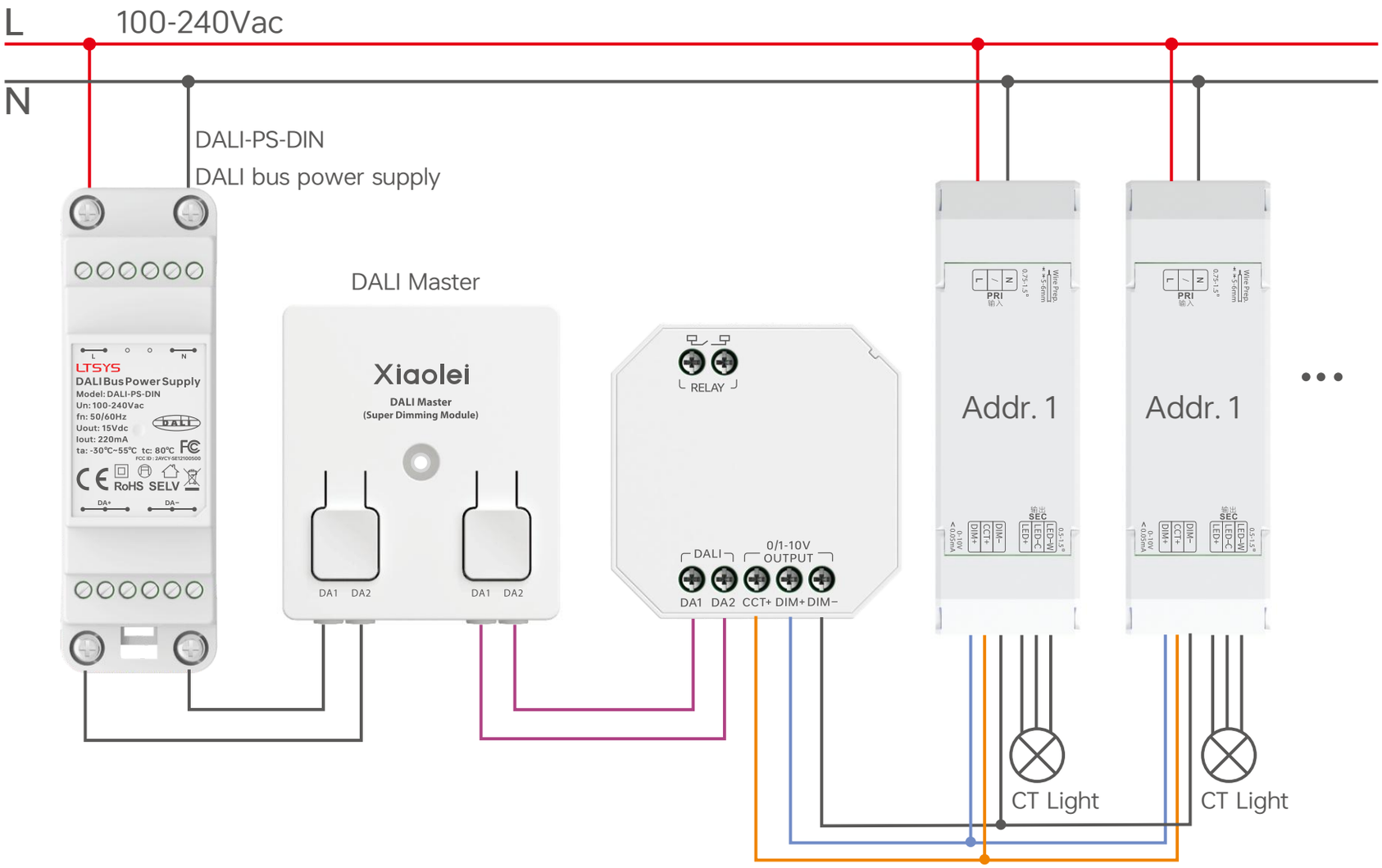

6. Connect the 0/1-10V output to enable switch control of 0/1-10V dimmable loads powered by 100-240Vac (single-address, single-channel dimming mode).

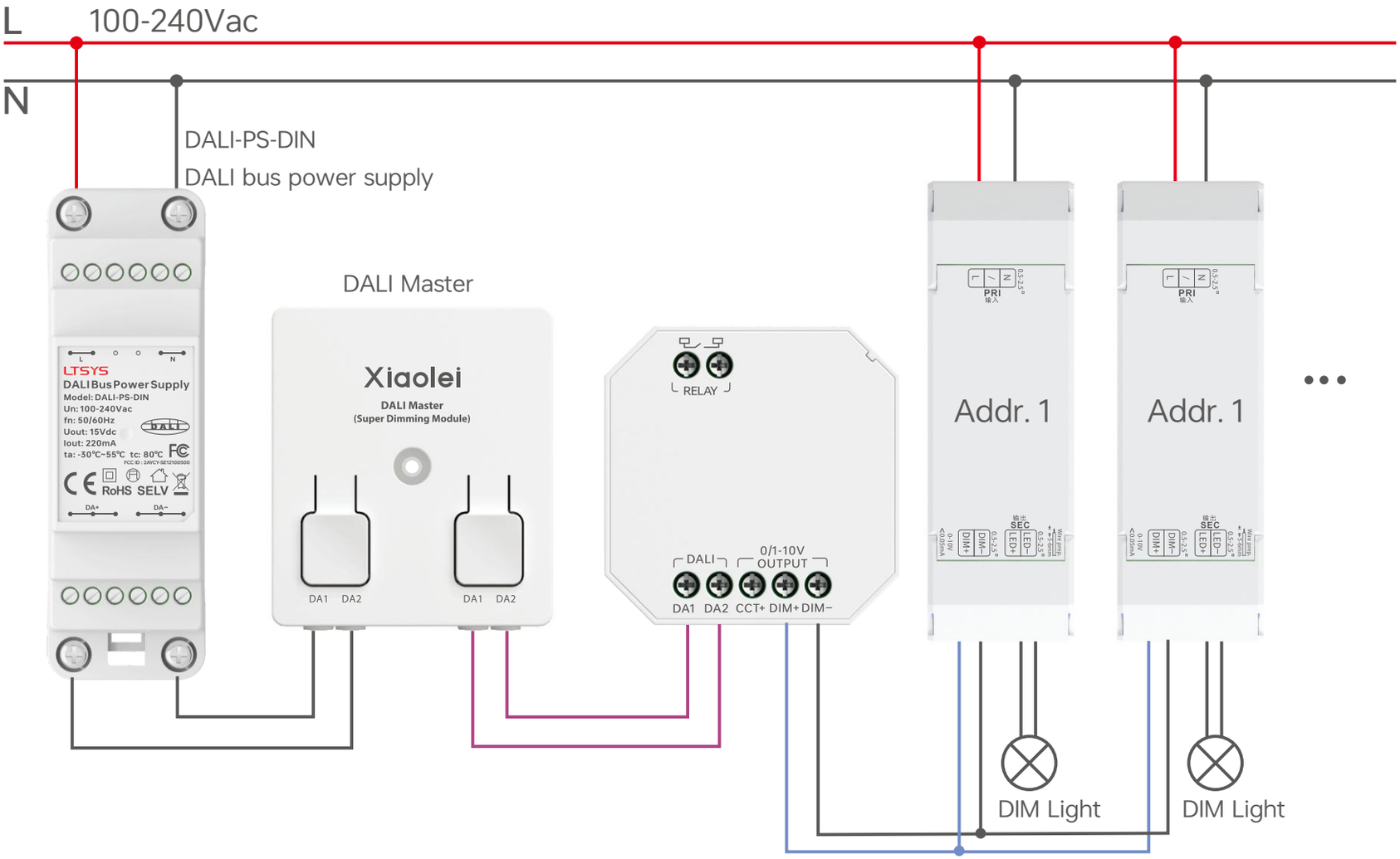

7. Connect the relay output to control the switching of loads powered by 100-240Vac.

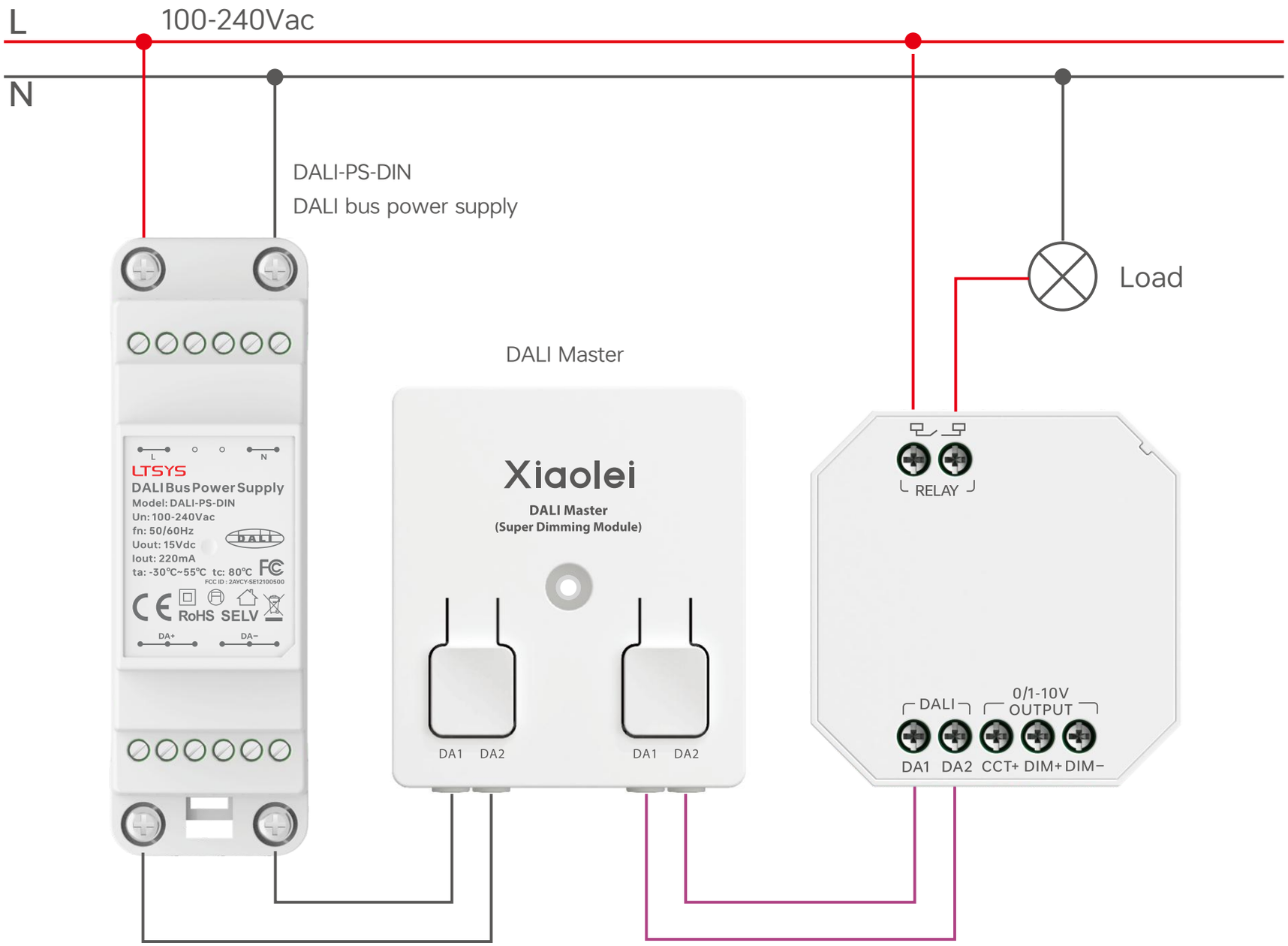

8. Connect the relay output to control the switching of loads powered by 12-48Vdc.

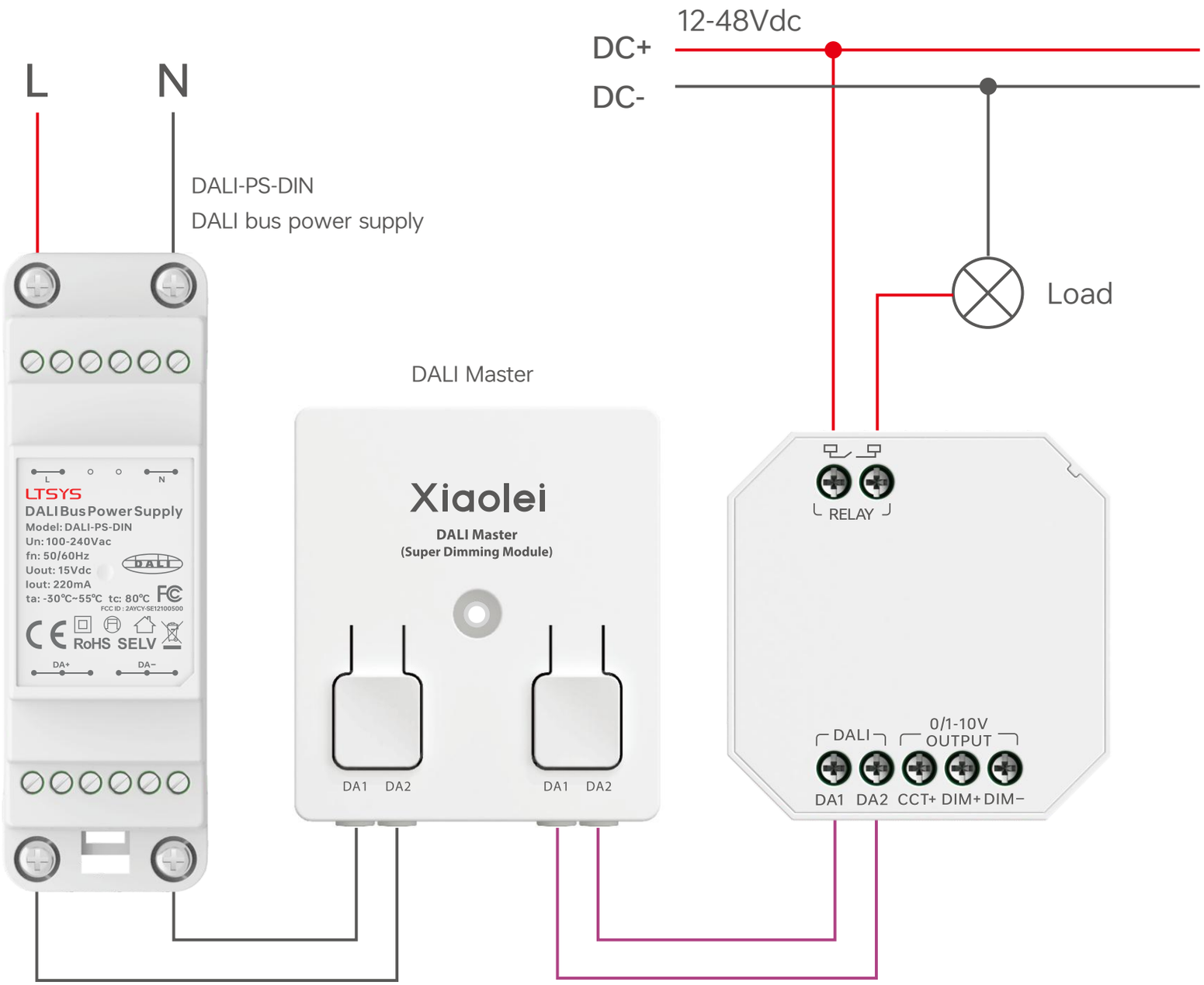

9. External Contactor Connection Method.

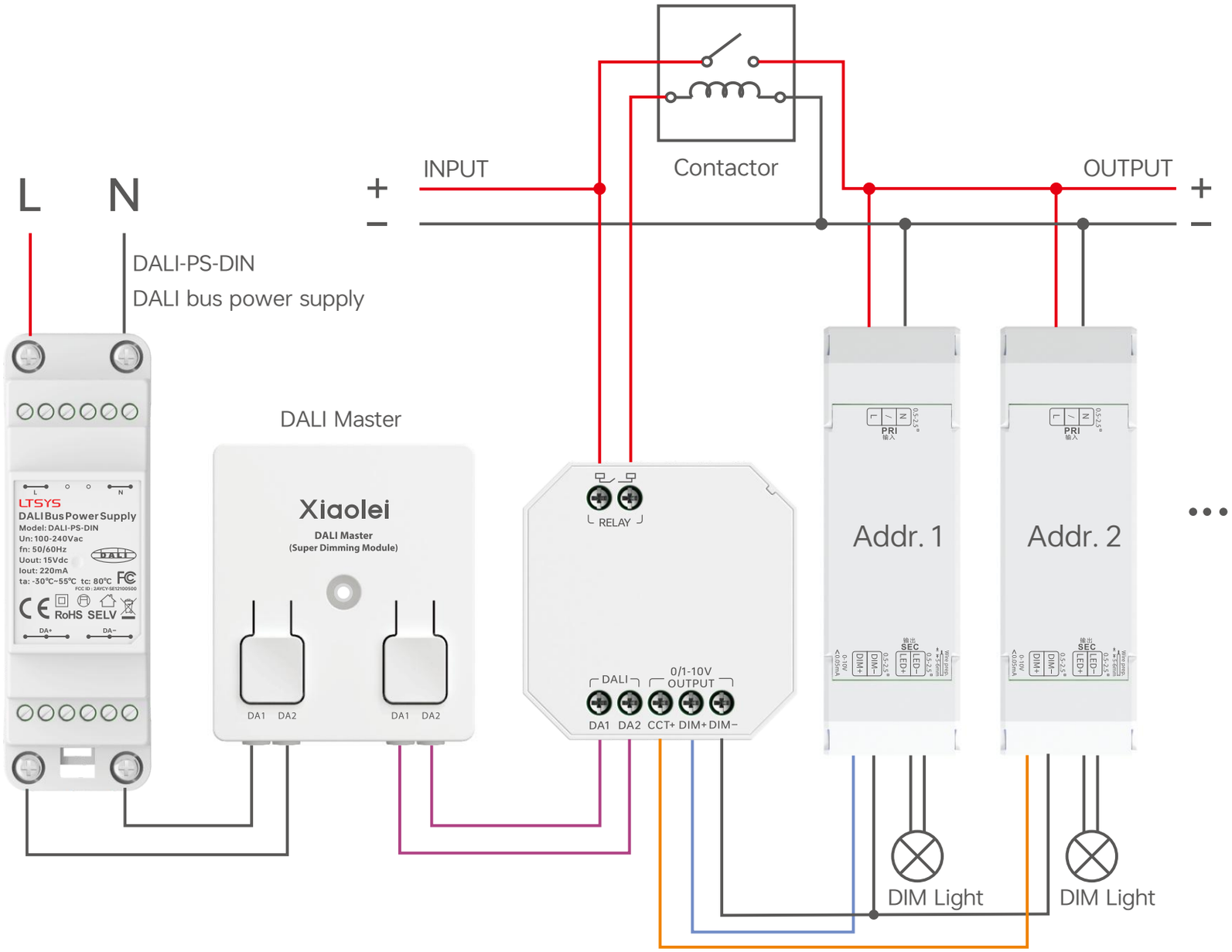

Use the NFC Lighting APP

Scan the QR code below with your mobile phone and install the APP as prompted.
(Due to performance requirements, the required phone model is Apple: iPhone8 or above, and the operating system iOS13 or above; Android: NFC enabled models).

Scan code download APP
IOS/Android

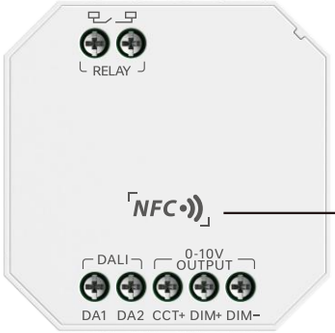

NFC identifier of the device

*When setting device parameters, Perform this operation only when the device is powered off.

1. Read the device

Click "Read/Write smart Power Supply" in the APP [home page], place the sensing area of the phone near the NFC identification point of the driver, and read the device parameters.

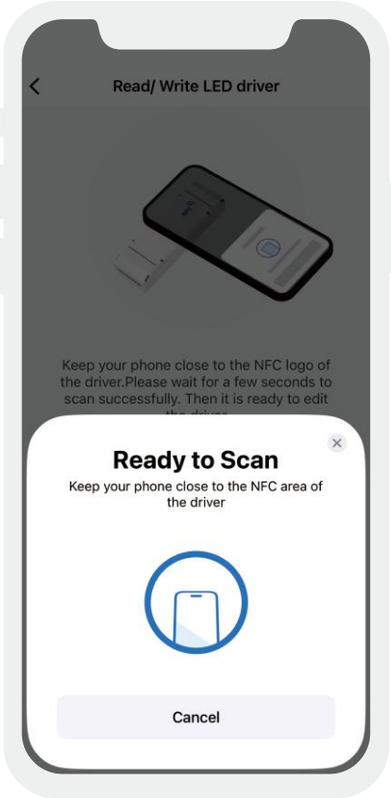

2. Edit parameters

Click “Parameters” to edit parameters such as DALI address, Dimming Curve, and Advanced DALI Template settings.

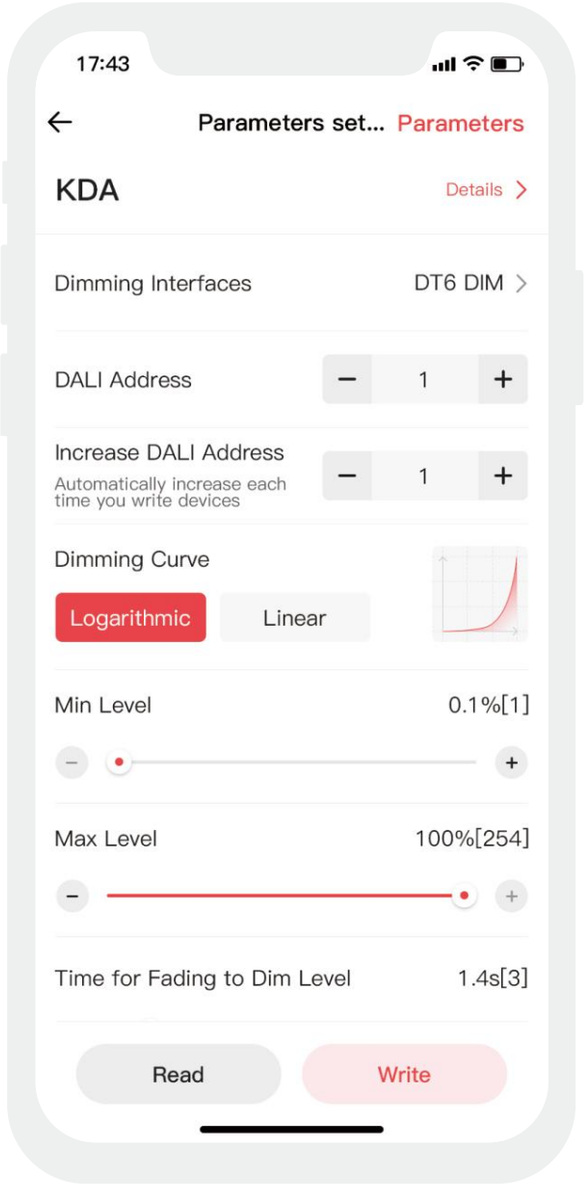

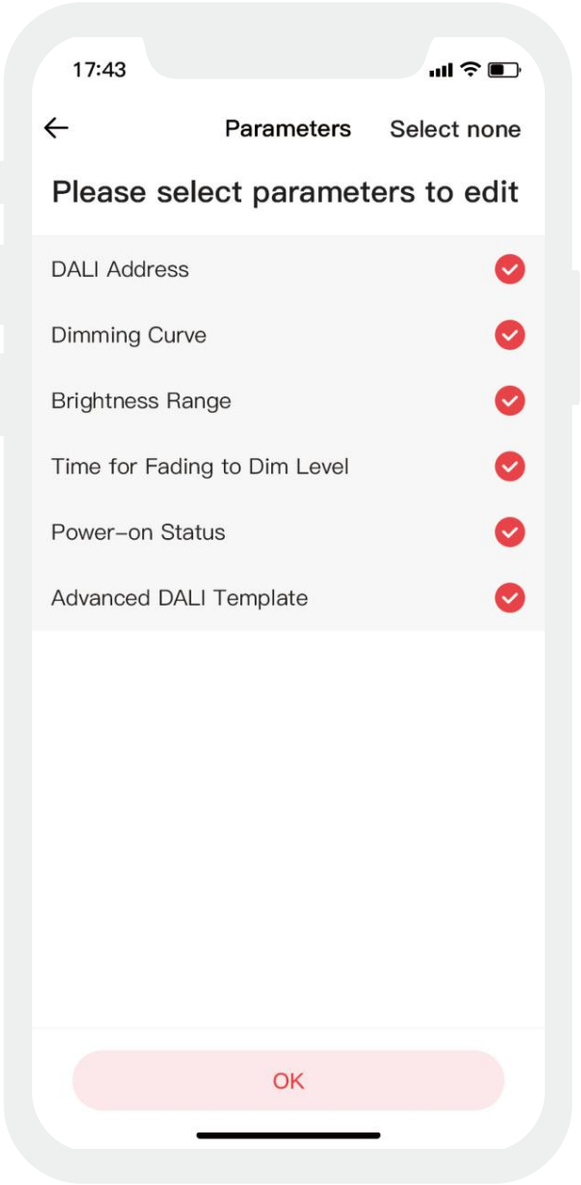

3. Dimming interface Settings

Click the “Dimming Interfaces” to configure various settings including DT8 CT, DT6 CT, and DT6 DIM.

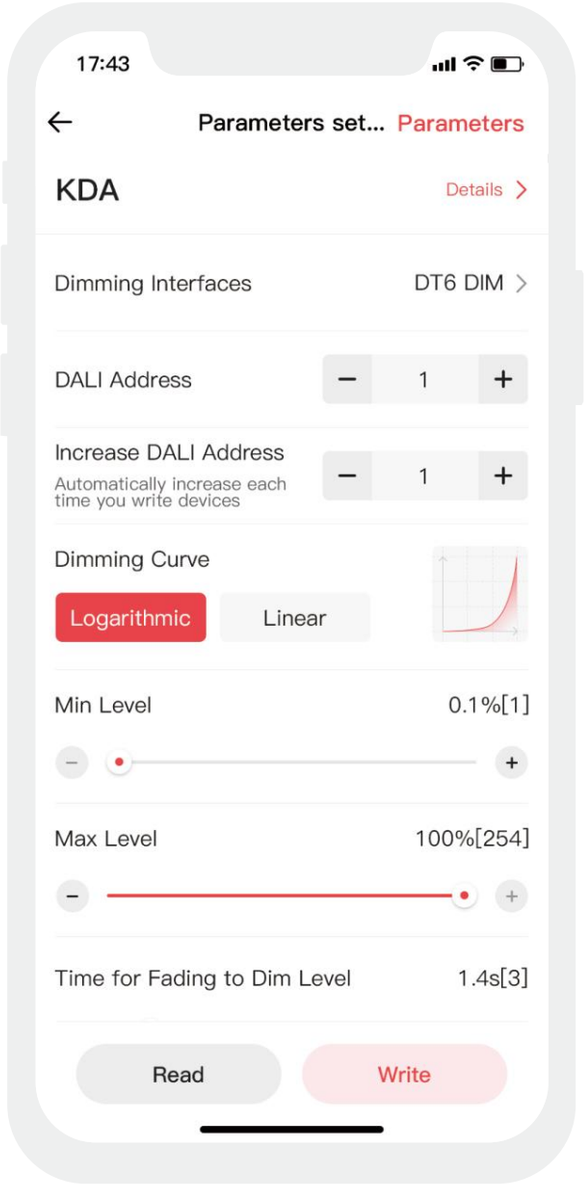

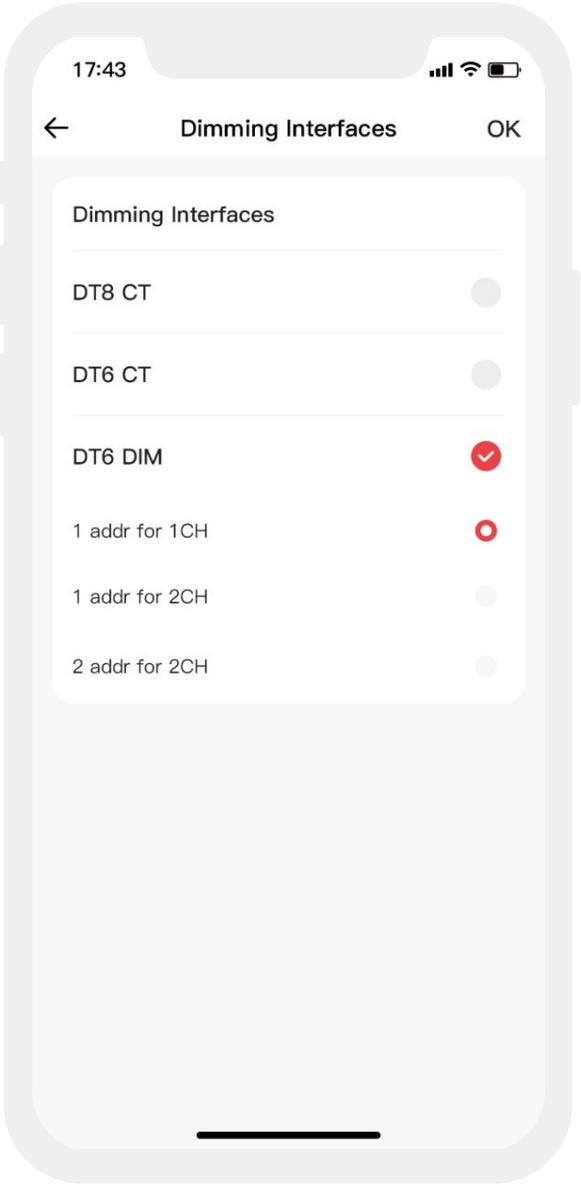

Attention

- Product installation and commissioning should be done by a qualified professional.
- Our company products are and not lightningproof non-waterproof(special models excepted). Please avoid the sun and rain. When installed outdoors, please ensure they are mounted in a waterproof enclosure or in an area equipped with lightning protection devices.
- Good heat dissipation will prolong the working life of products. Please ensure good ventilation.
- Please check if the working voltage used complies with the parameter requirements of products.
- The diameter of wire used must be able to load the light fixtures you connect and ensure the firm wiring.
- Before you power on products, please make sure all the wiring is correct in case of incorrect connection that causes damage to light fixtures.
- If a fault occurs, please do not attempt to fix products by yourself. If you have any question, please contact your suppliers.

＊This manual is subject to changes without further notice. Product functions depend on the goods. Please feel free to contact our official distributors if you have any question.

Warranty Agreement

- Warranty periods from the date of delivery: 5 years.
- Free repair or replacement services for quality problems are provided within warranty periods.

Warranty exclusions below:

Following conditions are not within the guarantee range of free repairing or replacement services:

- Beyond warranty periods.
- Any artificial damage caused by high voltage, overload, or improper operations.
- Products with severe physical damage.
- Damage caused by natural disasters and force majeure.
- Warranty labels and barcodes have been damaged.
- No any contract signed by our company.

1. Repair or replacement provided is the only remedy for customers. Our company is not liable for any incidental or consequential damage unless it is within the law.
2. Our company has the right to amend or adjust the terms of this warranty, and release in written form shall prevail.

DALI-0/1-10V模块

型号: KDA

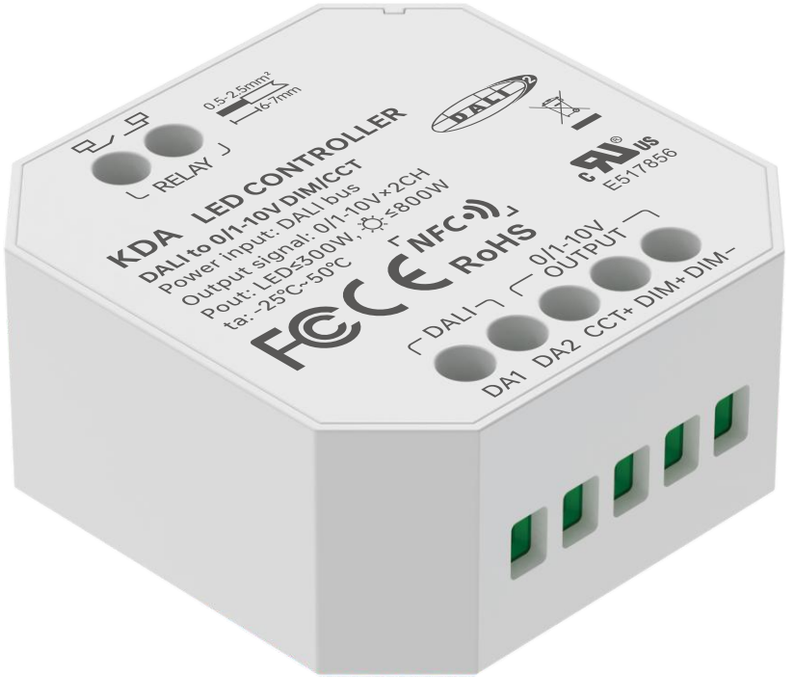

使 用 说 明 书