RGBW LED Remote Control

- Featuring a streamlined design and magnetic attachment, it is powered by two AAA batteries ;
- Utilizes 2.4 GHz RF wireless transmission for stable signals and strong interference resistance;
- Compatible with P-series and F-series controllers;
- Equipped with a dedicated on/off button for one-touch lighting control;
- Quickly adjust color using the color temperature and color touch sliders;
- W and RGB brightness are controlled via dedicated buttons, supporting short presses to toggle on/off and long presses to adjust, ensuring intuitive and convenient operation;
- Pre-programmed with 2 scene modes for quick access, and custom scenes can be saved by holding down the button;
- A single controller can be paired with up to 10 remotes, and a single remote control can be used with multiple controllers;
- Supports synchronized dimming for controller groups.

Technical Specifications

Model	C4
Area Control	Single zone
Dimming Type	RGBW
Wireless Type	RF 2.4GHz
Power Supply	3Vdc (AAA batteries × 2) Note: Batteries must be purchased separately.
Standby Current	< 5uA
Compatible Controllers	P3 / P4 / P5/F4-3A / F4-5A / F4-DMX-5A / F5-DMX-4A
Operating Temperature	-25℃~50℃
Product Weight	Remote control: 62 g; Mount: 12 g
Dimensions	Remote control: L150 × W48 × H15.5 mm; Mount: L85 × W35 × H20 mm

CE FC RoHS

Dimensions

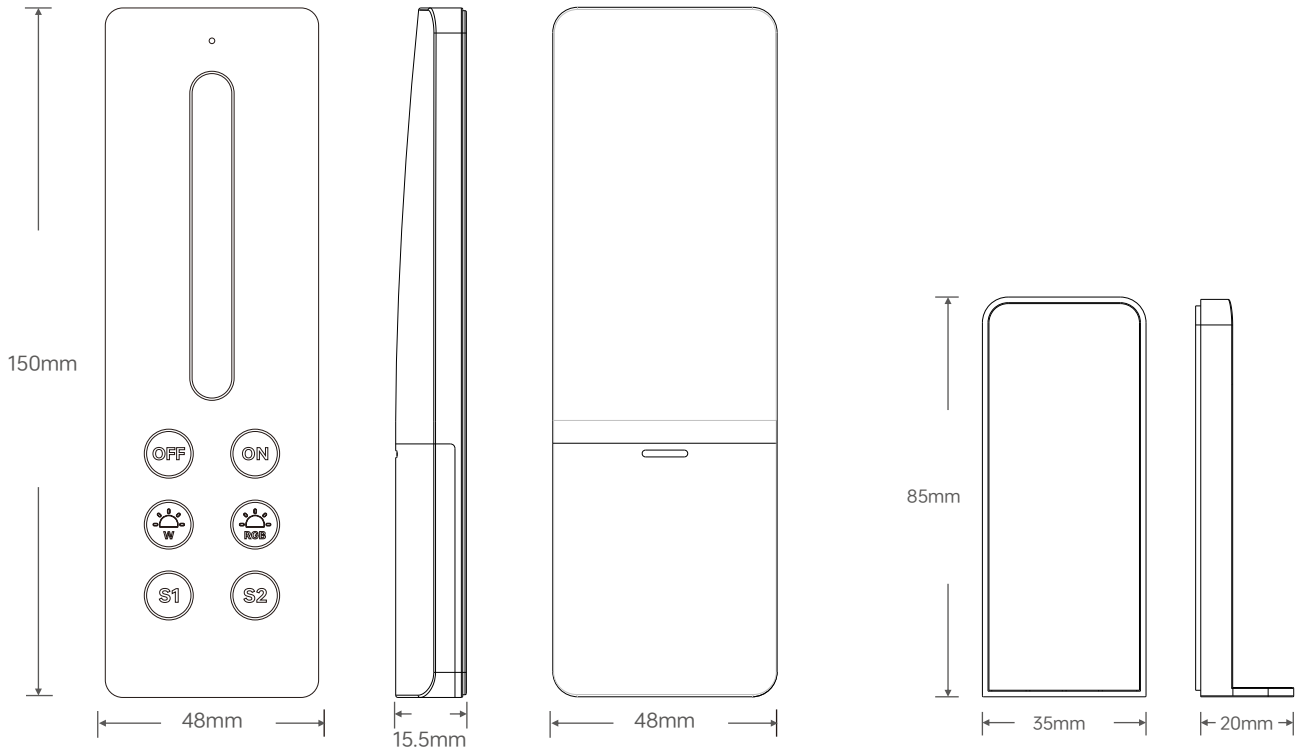

Remote Control

Magnetic Mount

Product Installation

①Open the battery compartment on the remote control and insert two AAA batteries, making sure to insert them with the correct polarity.

②Peel off the protective film from the included double-sided tape, attach the magnetic mount to the wall, and press firmly to secure it (let it sit for 24 hours to ensure a secure bond before placing the remote control on it to prevent it from falling off).

③Attach the remote control to the magnetic mount to complete the installation.

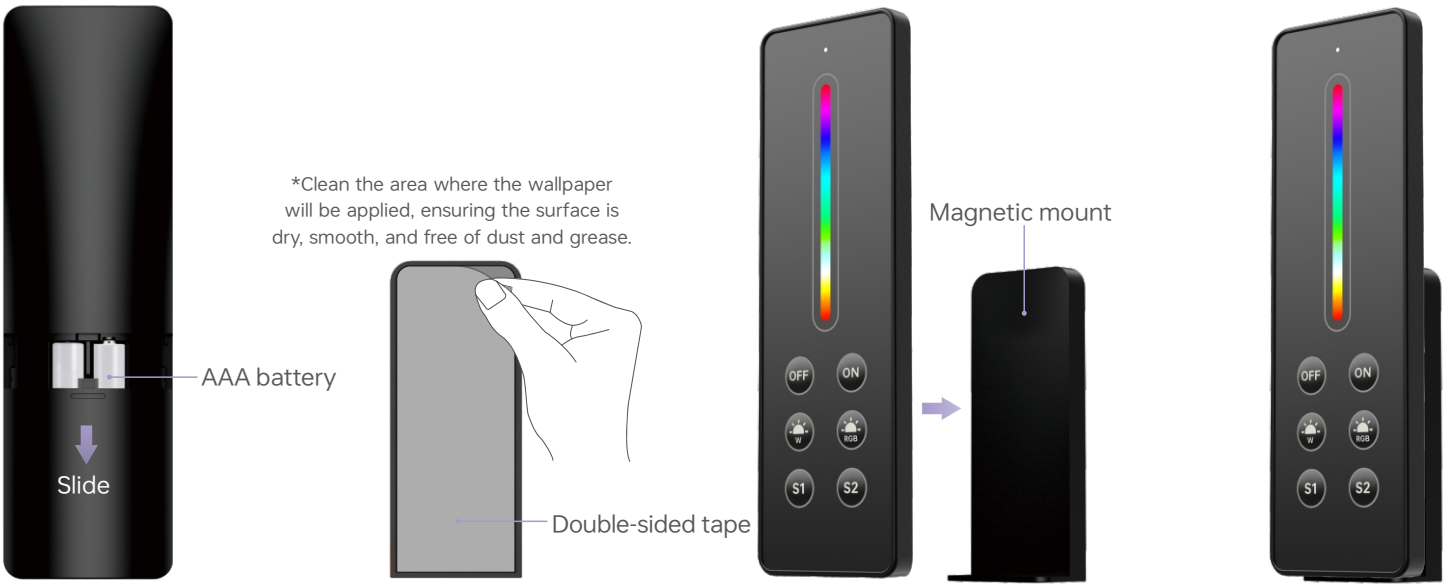

Button Functions

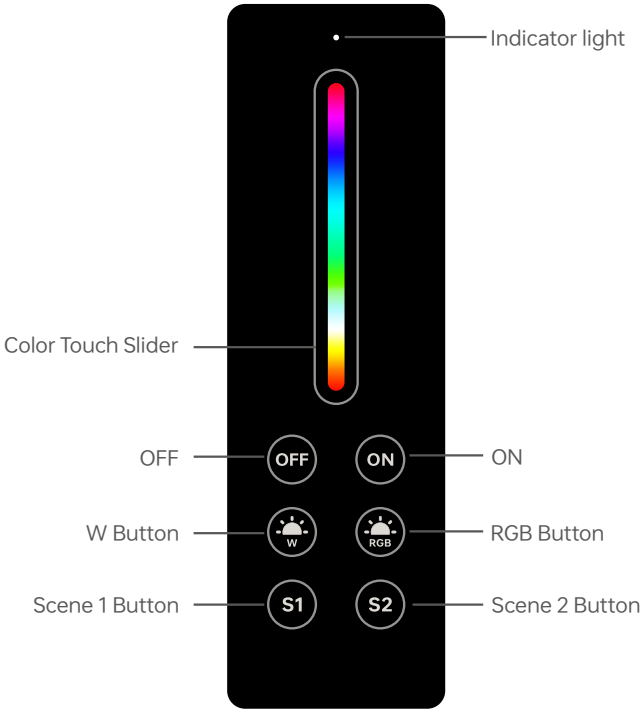

ON Button: Press briefly to turn on; press and hold for 2 seconds to pair.
OFF Button: Press briefly to turn off.
Color Touch Slider: Touch to change the RGB color of the lights.
W Button: Press briefly to toggle the W channel; press and hold to adjust the W brightness (stepless dimming).
RGB Button: Press briefly to toggle the RGB channel; press and hold to adjust RGB brightness (stepless dimming).
Scene Button: Press briefly to recall a scene; press and hold for 2 seconds to save the current lighting state to a scene, and the indicator light will flash red twice.
Indicator Light: The indicator light changes in sync with adjustments to color and brightness.

Note:
① If the indicator light on the remote control does not light up when a button is pressed, the batteries may be dead. Please replace the batteries promptly.
② If no buttons are pressed for 6 seconds, the remote control will enter sleep mode. Press any button to wake it up.

Wiring Diagram

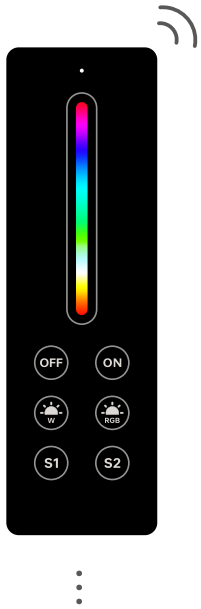

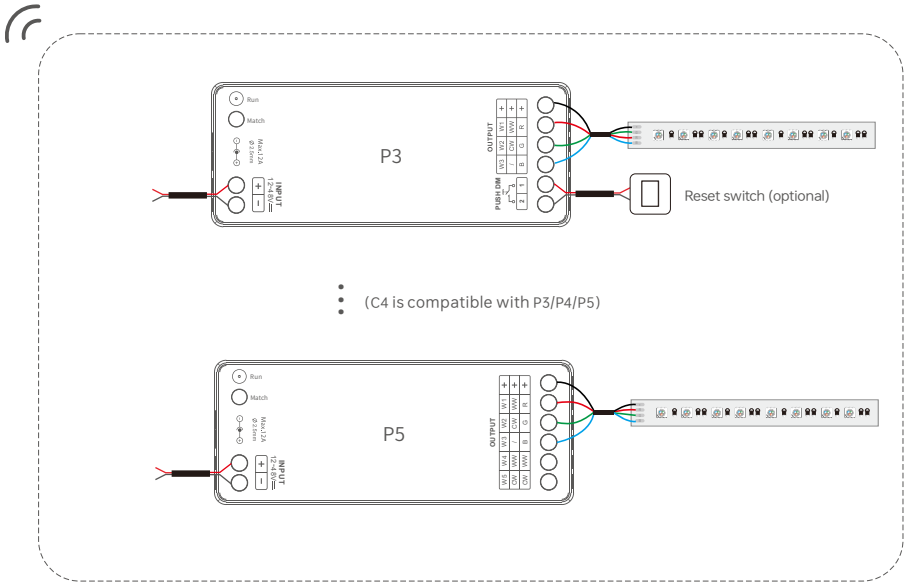

*Can be paired with up to 10 remote controls

For use with P-series controllers

Key pairing code

1. Short press the ID learning button on the controller. The load indicator will flash. Please complete the following steps within 10 seconds.

2. Pairing the remote control:

Press and hold the ON button on the remote control for 2 seconds.
The remote control indicator light will flash rapidly three times and then turn off.
If the color temperature slider or color slider changes when touched, the learning process was successful.

Power-on code pairing

1. After the controller has been powered off and then powered back on, please complete the following steps within 10 seconds.

2. Pairing the remote control:

Press and hold the ON button on the remote control for 2 seconds. The remote control's indicator light will flash rapidly three times and then turn off, and you will feel a change when touching the slider, indicating that the programming was successful.

Note: A single controller can pair with up to 10pcs remote controls. If more than 10pcs remote controls are paired, the ID code of the first remote control will be automatically deleted.

Clear Code

To delete all remote controls:

Press and hold the controller ID learning button for 6 seconds. The controller load light will flash 4 times quickly and then stay on, indicating successful code clearing

Use the Remote Controls Together

Code Pairing (assuming B learns from A)

1. Press and hold the ON and OFF buttons on the remote control simultaneously until the indicator light stays on, then release them.

2. Within 5 seconds, press any button on Remote A. The indicator light on Remote B will flash twice rapidly and then turn off, indicating that the pairing was successful.

*Assuming Remote Control A has already been paired with the controller, if you program Remote Control B to mimic Remote Control A, Remote Control B can be used to control the system directly without needing to be paired with the controller;
*Only remotes of the same model can be programmed to mimic each other.

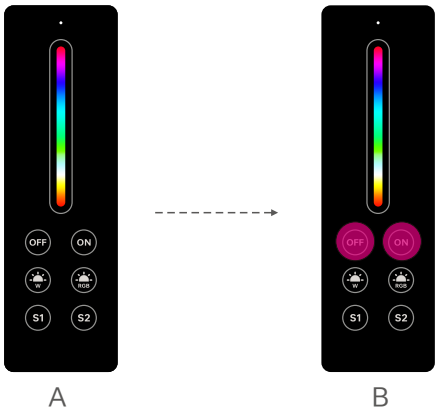

Clear Code

Press and hold the S1 and S2 buttons on the B remote control simultaneously for about 10 seconds; when the indicator light flashes three times, the programmed remote control code will be cleared.

Transportation and Storage

1. Transportation

Products can be shipped via vehicles, boats and planes.

During transportation, products should be protected from rain and sun. Please avoid severe shock and vibration during the loading and unloading process.

2. Storage

The storage conditions should comply with the Class I Environmental Standards. The products that have been stored for more than six months are recommended to be re-inspected and can be used only after they have been qualified.

Attentions

- Please use in a dry indoor environment;
- When installing the battery, please connect the positive and negative terminal correctly. If the remote will not be used for a long period, take the battery out;
- When the remote distance is shorten and or the remote doesn't work frequently, please change the battery in time;
- Please carefully take it and put it down to prevent falls that cause damage;
- If a fault occurs, please do not attempt to fix products by yourself. If you have any question, please contact your suppliers.

⁎ This manual is subject to changes without further notice. Product functions depend on the goods. Please feel free to contact our official distributors if you have any question.

Warranty Agreement

- Warranty periods from the date of delivery: 5 years.
- Free repair or replacement services for quality problems are provided within warranty periods.

Warranty exclusions below:

Following conditions are not within the guarantee range of free repairing or replacementservices:

- Beyond warranty periods;
- Any artificial damage caused by high voltage, overload, or improper operations;
- Products with severe physical damage;
- Damage caused by natural disasters and force majeure;
- Warranty labels and barcodes have been damaged.
- No any contract signed by our company.

1. Repair or replacement provided is the only remedy for customers. Our company is not liable for any incidental or consequential damage unless it is within the law.

2. Our company has the right to amend or adjust the terms of this warranty, and release in written form shall prevail.

Update Log

Version	Updated Time	Update Conten	Updated by
A0	20260424	Original version	Haipeng Li